ROSTA Motorbases

Self-tensioning Motor Mounts for all Friction Belt Drives
slippage-free – belt protecting – maintenance-free

ROSTA
swinging solutions

Customer Benefits of the ROSTA Mo

MB 27

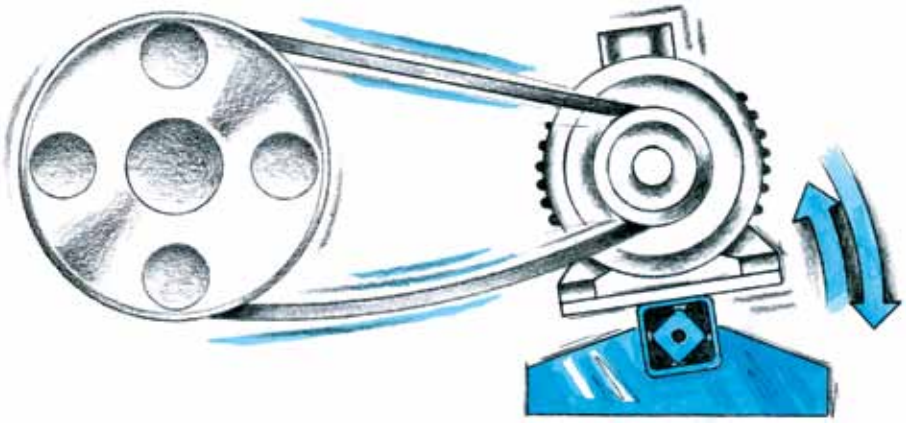

Offers short-term slippage by the start-up of large inertias, avoiding excessive tension on belt-carcass!

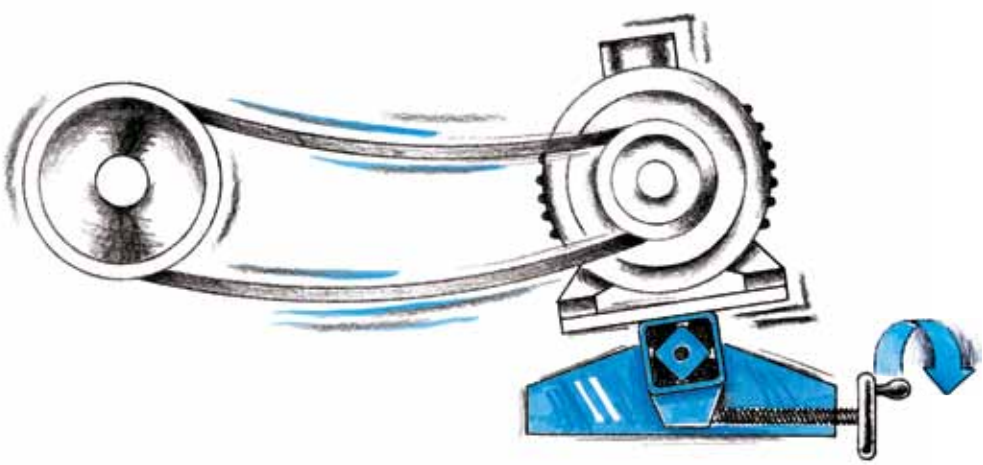

Offers fast belt changing, no need of complex readjustment of the pulleys!

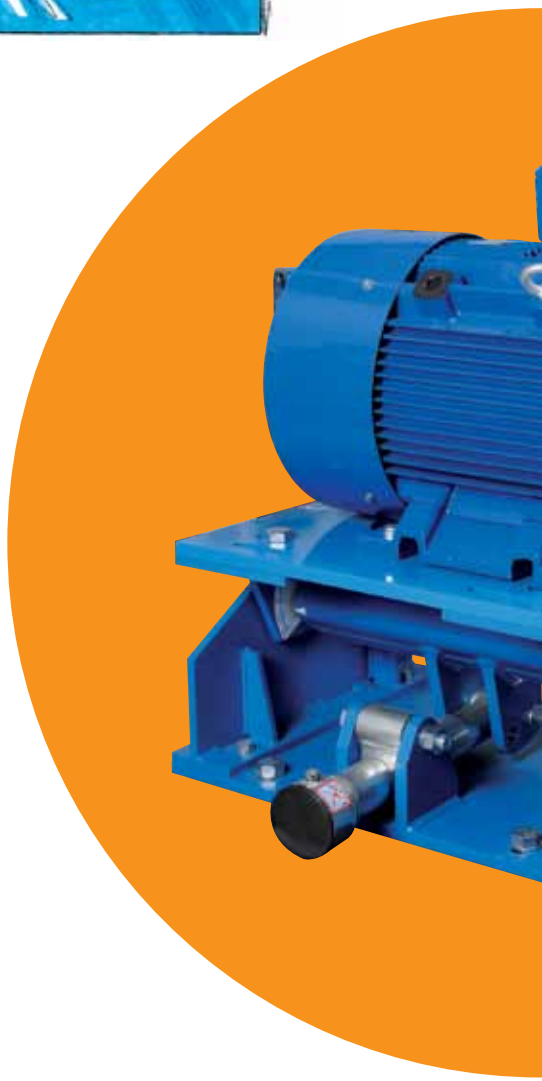

MB 38

Fully maintenance-free tensioning system, no need of periodical compensation of belt elongation!

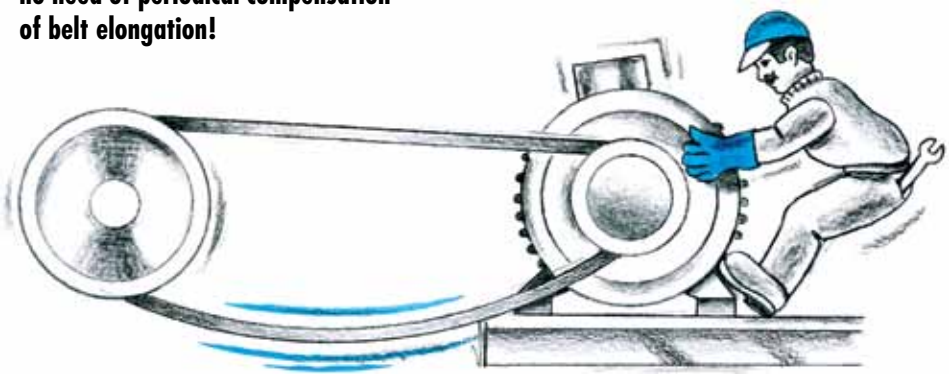

ROSTA

otorbases in Friction Belt Drives

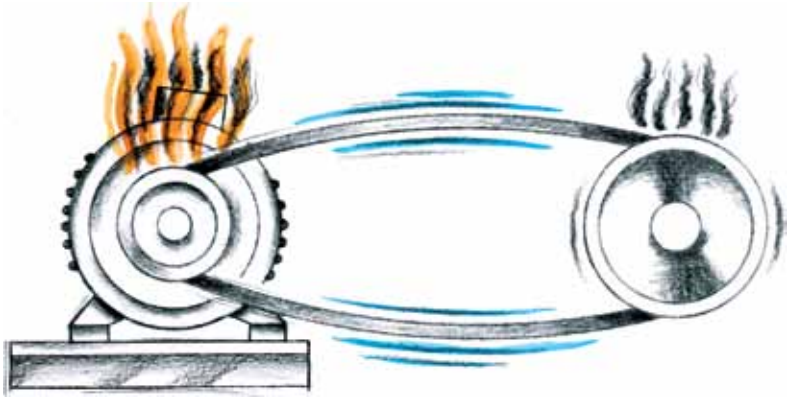

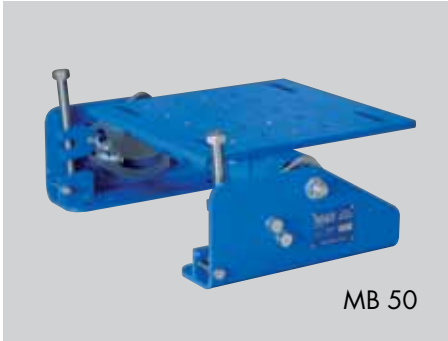

**Prevents from slack accruement,
avoids heat generating slippage of the belts
and averts from premature belt failure!**

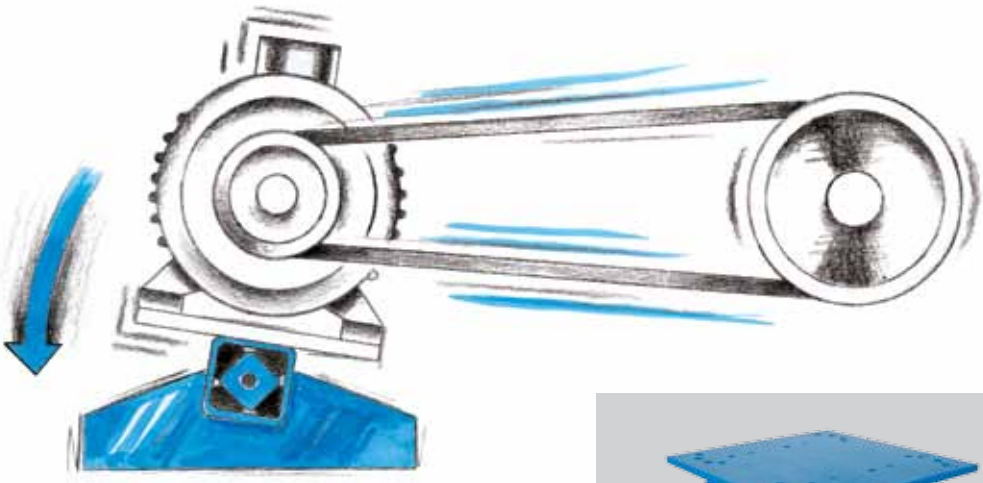

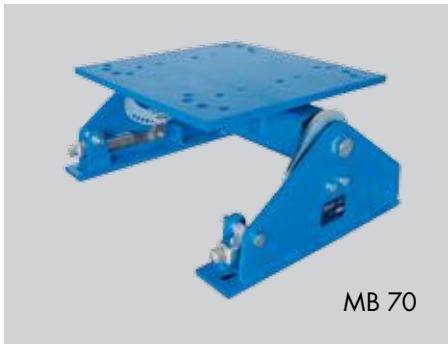

**Offers ideal belt tension,
constant transmission of nominal torque,
less energy consumption,
can lead to threefold belt lifetime!**

**Noiseless power transmission,
all time ideally tightened belt sets!**

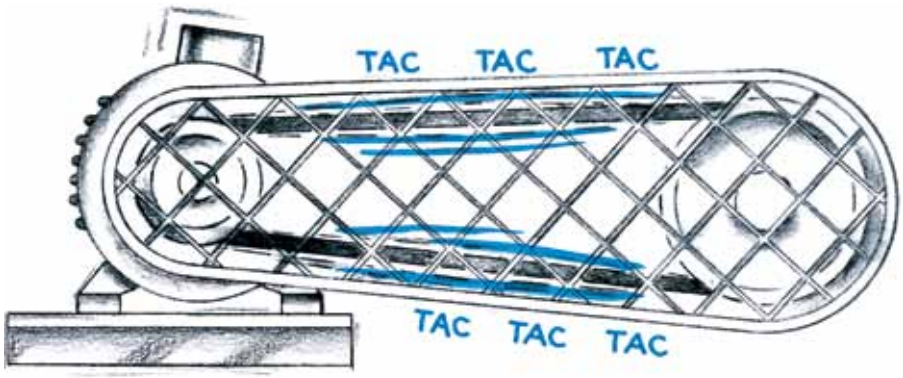

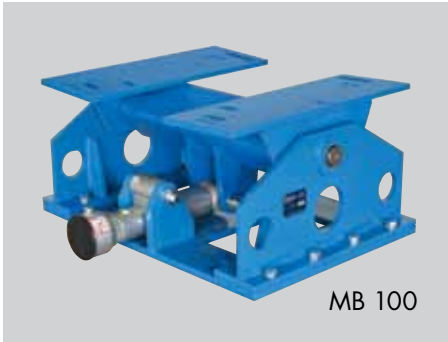

ROSTA

Selection table of **ROSTA**-Motorbases according to the motor frame sizes

IEC			NEMA			Type of Motorbase	Details	Standard Design
Motor Frame Size	P [kW] 1000 min⁻¹ 6-pole motor	P [kW] 1500 min⁻¹ 4-pole motor	Motor Frame Size	P [HP] 1200 min⁻¹ 6-pole motor	P [HP] 1800 min⁻¹ 4-pole motor			
90S 90L	0.75 1.1	1.1 1.5	143T 145T	0.75 1	1 1.5 / 2	**MB 27 × 120**	Pages 6–7	MB 27 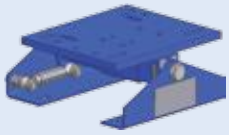
100L	1.5	2.2 / 3	182T	1.5	3			
112M	2.2	4	184T	2	5			
132S 132M	3 4 / 5.5	5.5 7.5	213T 215T	3 5	7.5 10	**MB 38 × 300**	Pages 6–7	MB 38 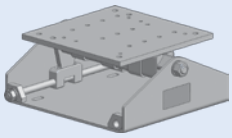
160M 160L	7.5 11	11 15	254T 256T	7.5 10	15 20			
160M 160L	7.5 11	11 15	254T 256T	7.5 10	15 20	**MB 50 × 270-1**	Pages 8–9	MB 50 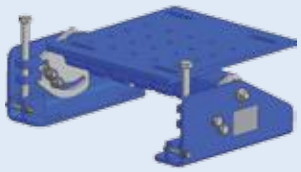
180M 180L	– 15	18.5 22	284T 286T	15 20	25 30	**MB 50 × 270-2**		
200L	18.5 / 22	30	324T 326T	25 30	40 50	**MB 50 × 400**		
225S 225M	– 30	37 45	364T 365T	40 50	60 75	**MB 50 × 500**		
250M	37	55	404T	60	100	**MB 70 × 400**	Pages 10–11	MB 70 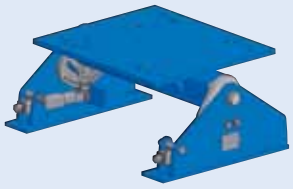
280S 280M	45 55	75 90	405T 444T	75 100	100 / 125 125 / 150	**MB 70 × 550**		
315S	75	110	445T	125 / 150	150 / 200	**MB 70 × 650**		
315M 315L	90 / 110 110–160	132–160 160–200	447T 449T	150–200 200–300	200–250 250–300	**MB 70 × 800**		
315M 315L	90 / 110 110–160	132–160 160–200	447T 449T	150–200 200–300	200–250 250–300	**MB 100 × 750**	Pages 12–13	MB 100 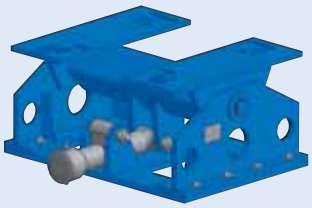
355S 355M 355L	132–160 200–250 200–250	200–250 250 250	586/7	250–350	300–350			

Directions regarding customized designs of motorbases on pages 14/15.
In case of possibly not mentioned motor frame sizes, please contact **ROSTA**.

Test forces for ideal belt tensioning

The ROSTA-Motorbase is offering with its mechanical pretensioning device the ideal calibration of the relevant belt tension, based on the test force recommendations of the belt suppliers. These recommended test forces for the most common V-belt sizes are mentioned in the test force table on the right.

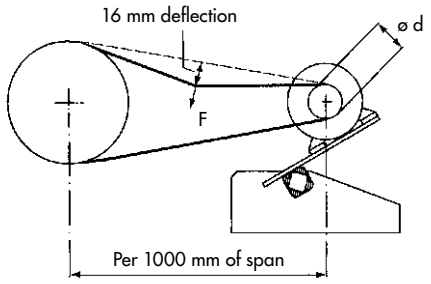

Test force table by initial V-belt installation

(standard values for the most common types of V-belts)

V-belt type	Width [mm]	Height [mm]	Diam. of smaller pulley [mm]	Initial operation test-force F_I* [N]	Operational test-force F_O* [N]
XPZ, SPZ	10	8	56–71 75–90 95–125 ≥ 125	20 22 25 28	16 18 20 22
XPA, SPA	13	10	80–100 106–140 150–200 ≥ 200	28 38 45 50	22 30 36 40
XPB, SPB	16	13	112–160 170–224 236–355 ≥ 355	50 62 77 81	40 50 62 65
XPC, SPC	22	18	224–250 265–355 ≥ 375	87 115 144	70 92 115
Z	10	6	56–100	5–7.5	
A	13	8	80–140	10–15	
B	17	10	125–200	20–30	
C	22	12	200–400	40–60	
D	32	19	355–600	70–105	

* Test force for V-belts. By ideal belt tensioning a deflection of 16 mm per 1000 mm pulley center distance shall occur. (By shorter or longer span, the value 16 mm has to be interpolated.)

Usual positioning of the ROSTA Motorbase in screen drive applications

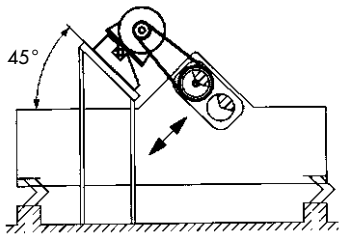

Linear Motion Screen
"Low-Head" Types

1. "Overhead" Configuration

Base plate "center mounted" on ROSTA element. Plate position horizontally on base. Installation of the entire base 45° inclined (aligned to exciter).

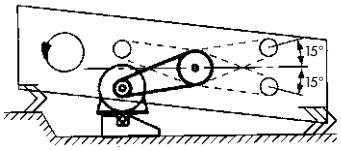

Circular Motion Screen
"Ripple-Flow" Types

2. "Along-Side" Configuration

Base plate "center mounted" on ROSTA element. Plate position horizontally on base. Motor shaft min. 15° above or below the driven eccentric shaft.

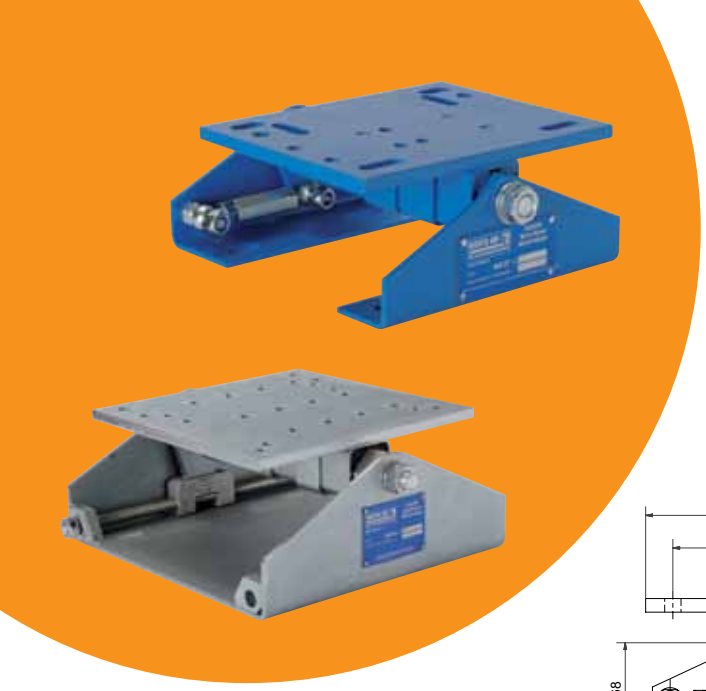

Motorbases
Type MB 27
Type MB 38

MB 27 × 120

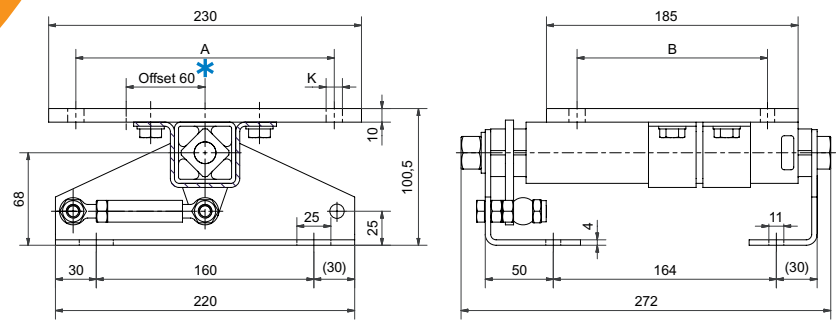

MB 38 × 300

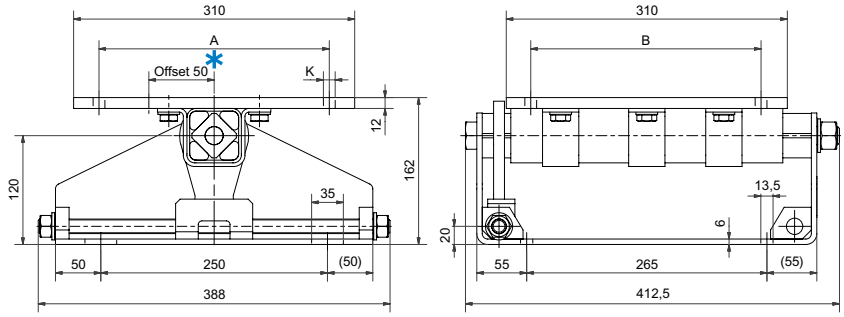

Art.-No.	Type	IEC				NEMA				Weight [kg]
		Motor Frame Size	A	B	K	Motor Frame Size	A	B	K	
02 200 201	**MB27 × 120**	90S 90L	140 140	100 125	10.5 10.5	143T 145T	140 140	102 127	10.5 10.5	8
		100L	160	140	10.5	182T	190	114	10.5	
		112M	190	140	10.5	184T	190	140	10.5	
02 000 301	**MB38 × 300**	132S 132M	216 216	140 178	M10 M10	213T 215T	216 216	140 178	M10 M10	26
		160M 160L	254 254	210 254	13 13	254T 256T	254 254	210 254	13 13	

Details regarding special designs, see pages 14/15.

* Is the resulting tension-travel of the motorbase not effectual, we recommend to position the motor plate in "off-set" configuration, offering enlarged compensation travel.

1 Motor plate
2 Side supports
3 Pretensioning device
4 Rubber suspension element with clamps (MB 27: 2 clamps / MB 38: 3 clamps)

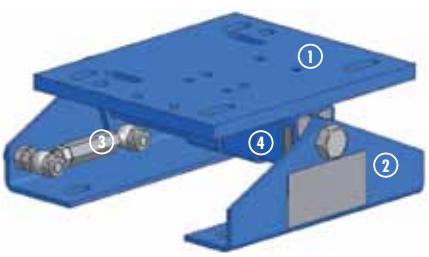

MB 27 × 120
Steel parts blue painted

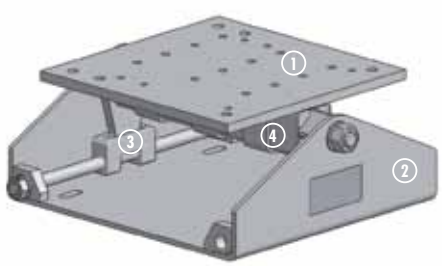

MB 38 × 300
Steel parts galvanized

Mounting instructions for MB 27 and MB 38

1 Ascertainment of the ideal motorbase position

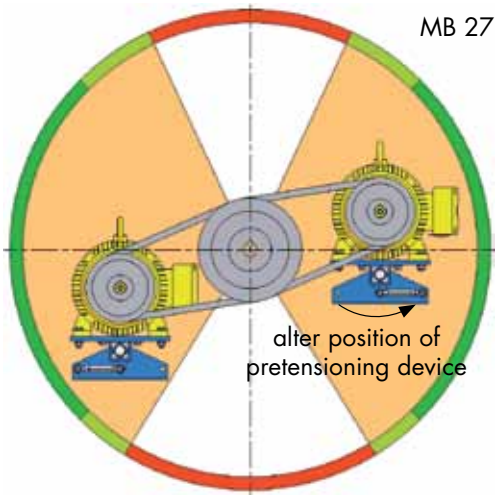

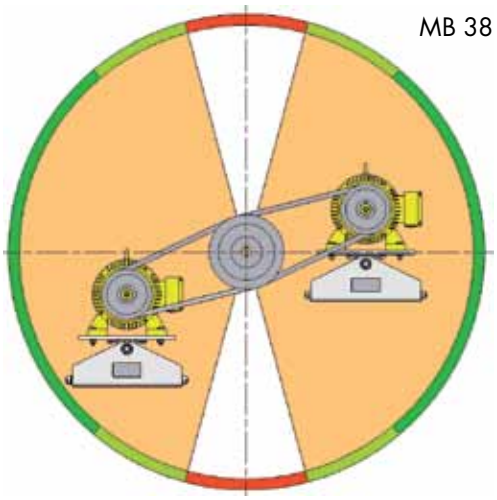

longest tensioning travel, ideal position of the MB

sufficient travel of the MB

in this position, insufficient travel is given (contact **ROSTA**)

2 Support fixations

MB 27:
4 oblong holes 11 × 25 mm
MB 38:
4 oblong holes 13.5 × 35 mm

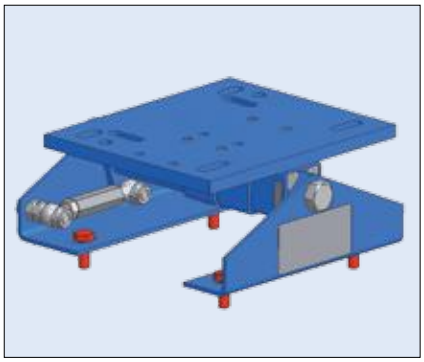

3 Alignment of pulleys and motor fixation

4 screws according relevant motor size

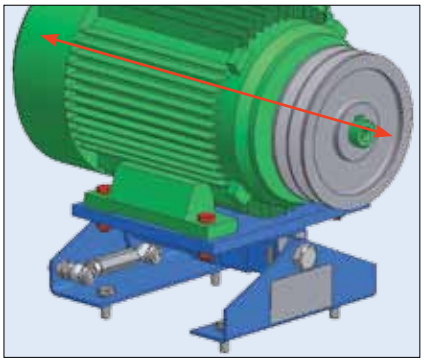

4 Loosen of the shaft screw (element axis)

MB 27: M16 and MB 38: M20

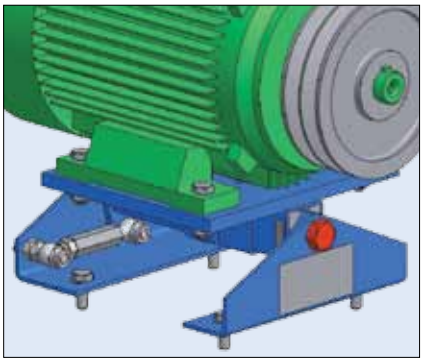

5 Insert and tension the belts, control belt test force

Tensioning of the belts according to belt suppliers recommended test force (table on page 5).

MB 27: by means of threaded bushing M10

MB 38: by means of threaded shaft M16 × 1.5

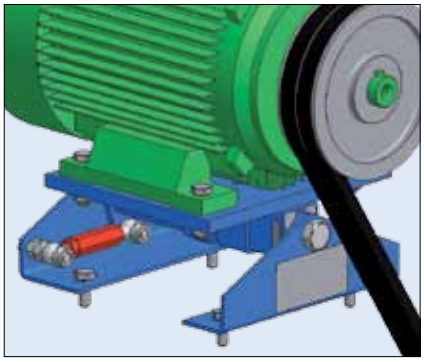

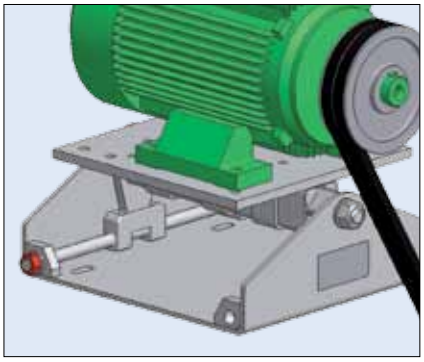

6 Tighten of the shaft screw (element axis), start of operation

MB 27: M16 (locking torque 210 Nm)
MB 38: M20 (locking torque 410 Nm)

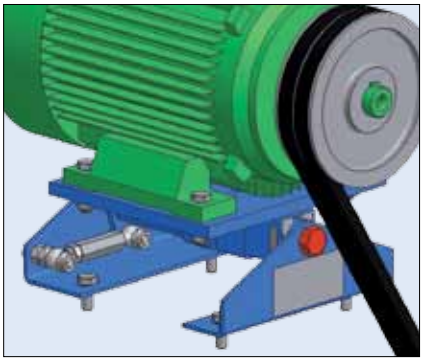

Retension:
Generally retensioning is not necessary, however, we recommend to control the belt tension after a few days of operation (after "running-in" of the belts).

Motorbase
Type MB 50

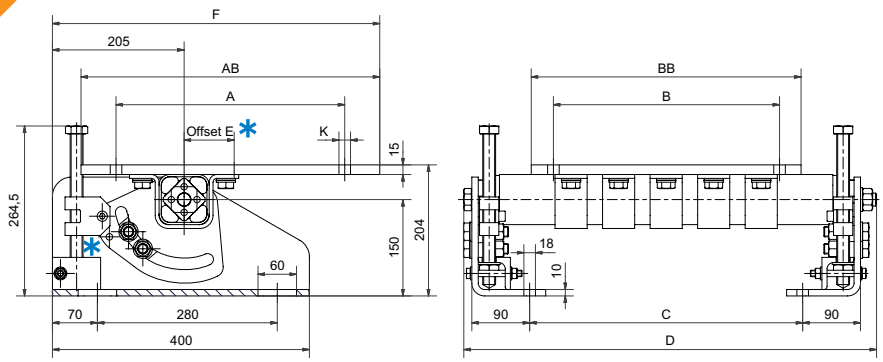

Art.-No.	Type	IEC				NEMA				AB	BB	C	D	E	F	Weight [kg]
		Motor Frame Size	A	B	K	Motor Frame Size	A	B	K							
02 200 506	**MB 50×270-1**	160M 160L	254 254	210 254	14 14	254T 256T	254 254	210 254	14 14	320	315	245	463	72	437	40
02 200 507	**MB 50×270-2**	180M 180L	279 279	241 279	14 14	284T 286T	279 279	241 279	14 14	350	350	245	463	72	452	43
02 200 508	**MB 50×400**	200L	318	305	18	324T 326T	318 318	267 305	18 18	405	390	345	563	55	463	53
02 200 509	**MB 50×500**	225S 225M	356 356	286 311	18 18	364T 365T	356 356	286 311	18 18	465	420	425	643	72	510	60

Details regarding special designs, see pages 14/15.

* All ROSTA-Motorbases MB 50 will be supplied with motor plate installed in **"off-set"** configuration. According to the final positioning of the base, the operating angle of the belts and the required tensioning travel, the motor plate can be altered in **"centered"** position on top of the element axis (recommendable by screen drive applications). Relevant threaded fixation holes are existent in plate.

For possibly required additional tensioning travel of the motor plate, the adjusting block of the pretensioning device can be set in the second hole-position of the friction plate (3).

1 Motor plate
2 Side supports
3 Pretensioning device
(MB 50×270-1 and MB 50×270-2: 1 device / MB 50×400 and MB 50×500: 2 devices)
4 Rubber suspension element with axial-guide bearings and clamps (depending on size = 2–5 clamps)

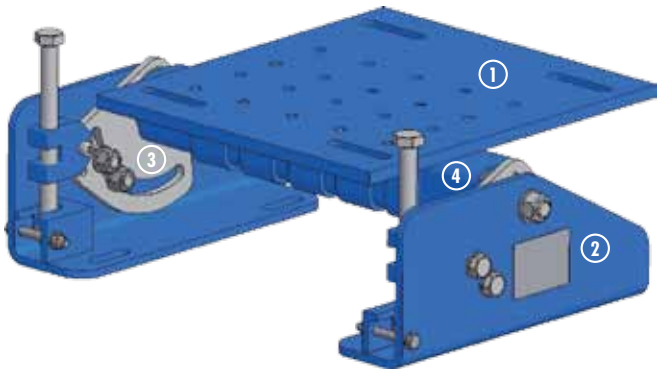

Mounting instructions for MB 50

1 Ascertainment of the ideal motorbase position

Operation area "above"
Motor plate standing ~ 30° inclined

Operation area "below"
Motor plate standing ~ horizontal

- longest tensioning travel, ideal position of the MB
- sufficient travel of the MB
- in this position, insufficient travel is given (contact **ROSTA**)

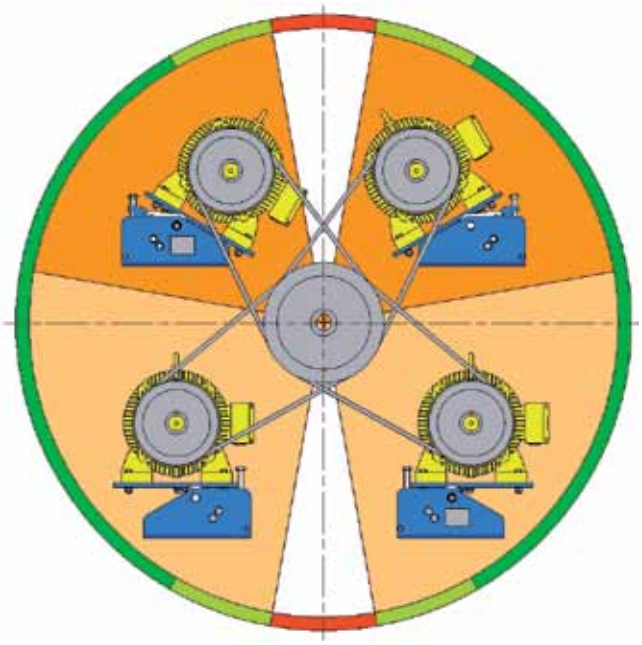

2 Support fixations

4 oblong holes 18×60 mm

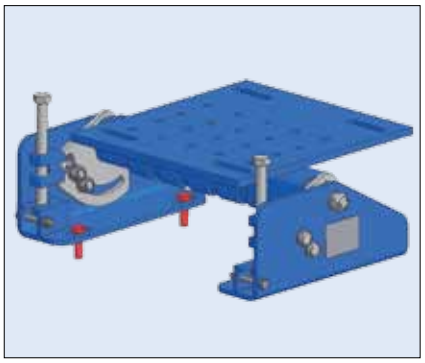

3 Alignment of pulleys and motor fixation

4 screws according relevant motor size

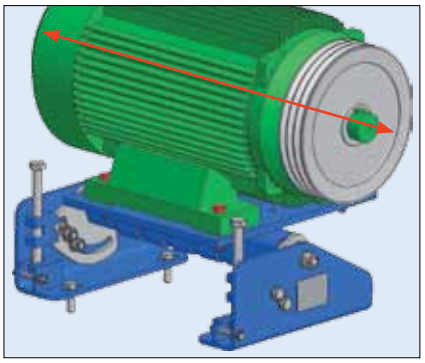

4 Loosen of the shaft screw (element axis) and of the screws on friction plate(s)

M20 and M16

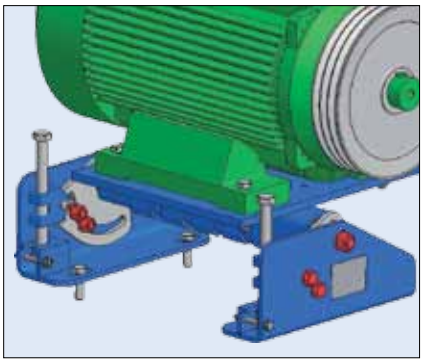

5 Insert and tension the belts, control belt test force

Tensioning of the belts according to belt suppliers recommended test force (table on page 5).

Operation area "below":
adjust with M20×1.5 screw
(for tightening = screw block upwards)

Operation area "above":
adjust with M20×1.5 screw
(for tightening = screw block downwards)

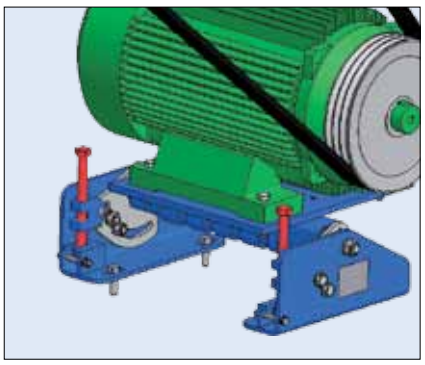

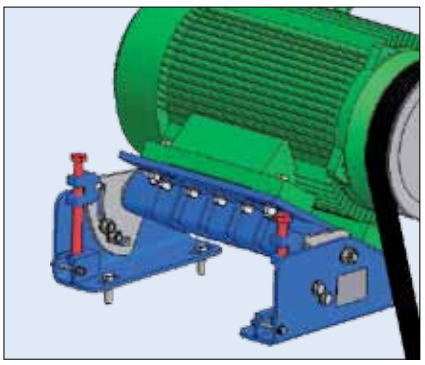

6 Tighten of the shaft and fixing screws on friction plate(s), start of operation

M20 (locking torque 410 Nm),
M16 (locking torque 210 Nm)

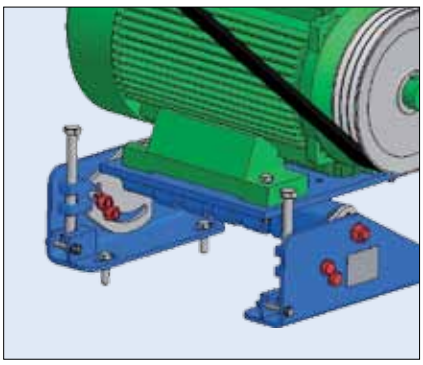

Retension:
Generally retensioning is not necessary, however, we recommend to control the belt tension after a few days of operation (after "running-in" of the belts).

Motorbase Type MB 70

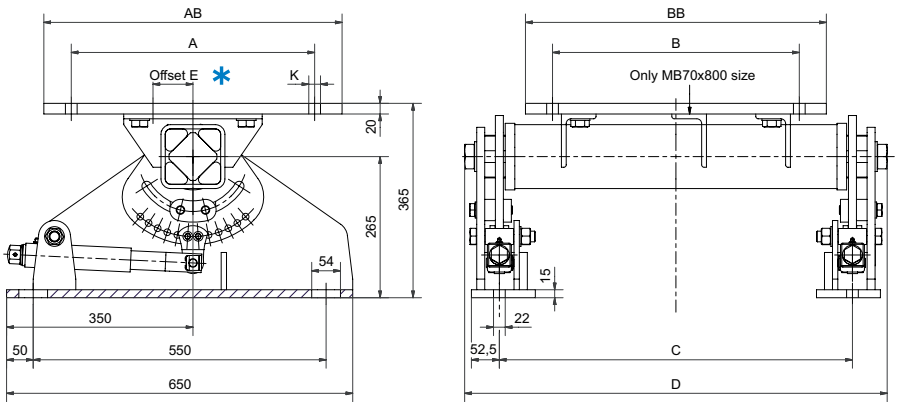

Art.-No.	Type	IEC				NEMA									Weight [kg]
		Motor Frame Size	A	B	K	Motor Frame Size	A	B	K	AB	BB	C	D	E	
02 200 710	**MB 70×400**	250M	406	349	22	404T	406	311	22	510	410	513	643	50	142
02 200 711	**MB 70×550**	280S	457	368	22	405T	406	349	22	560	565	663	793	50	169
		280M	457	419	22	444T	457	368	22						
02 200 712	**MB 70×650**	315S	508	406	26	445T	457	419	22	630	660	763	893	70	191
02 200 713	**MB 70×800**	315M	508	457	28	447T	457	508	22	630	805	913	1043	70	216
		315L	508	508	28	449T	457	635	22						

Details regarding special designs, see pages 14/15.

* All ROSTA-Motorbases MB 70 will be supplied with motor plate installed in **"centered"** configuration on top of the element axis. According to the final positioning of the base, the operating angle of the belts and the required tensioning travel, the motor plate can be altered in **"off-set"** position. Relevant threaded fixation holes are existent in plate.

For possibly required additional tensioning travel of the motor plate, the fork head of the pretensioning device can be set in one of the eleven hole positions of the friction plate (3).

1 Motor plate
2 Side supports
3 Pretensioning devices = 2 devices
4 Rubber suspension element with axial guide bearings

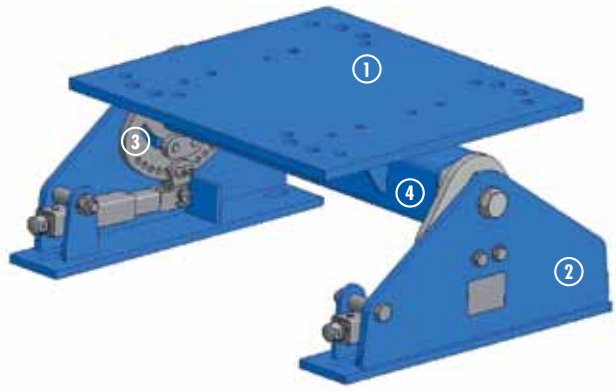

Mounting instructions for MB 70

1 Ascertainment of the ideal motorbase position

- longest tensioning travel, ideal position of the MB
- sufficient travel of the MB
- in this position, insufficient travel is given (contact **ROSTA**)

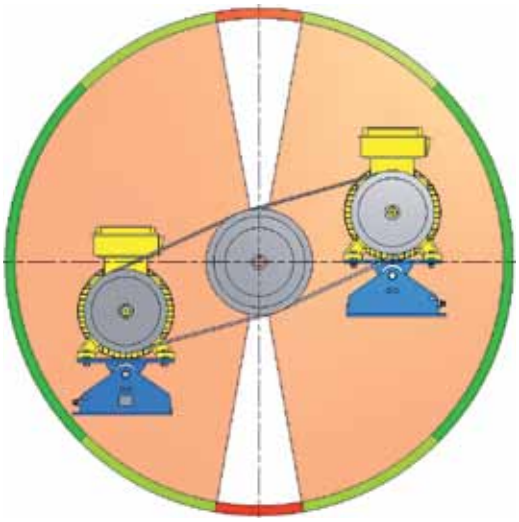

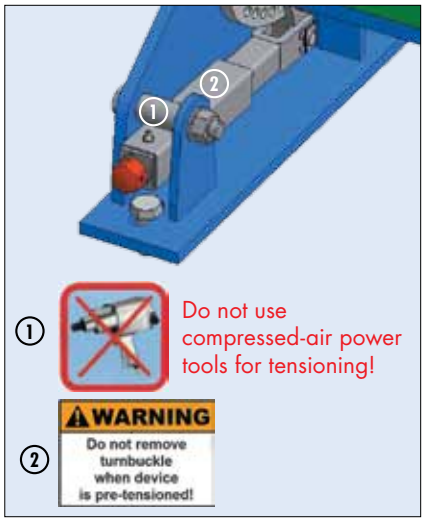

2 Support fixations

4 oblong holes 22 × 54 mm

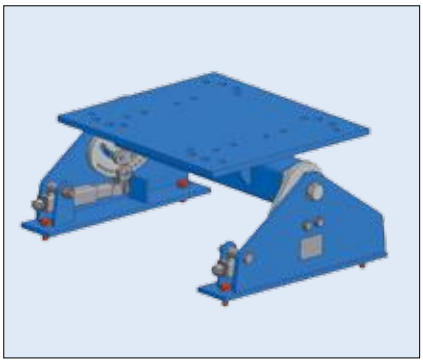

3 Alignment of pulleys and motor fixation

4 screws according relevant motor size

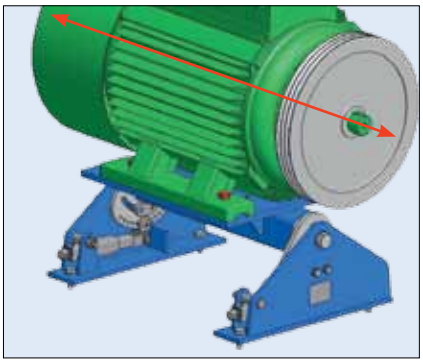

4 Loosen of the center screws (element axis) and of the screws on friction plates

M30 and M16

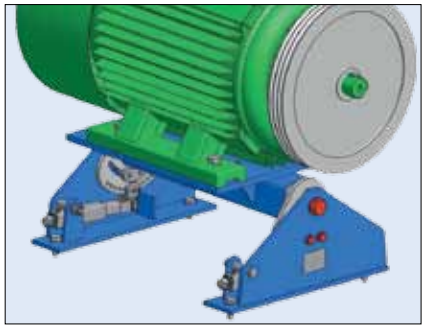

5 Insert and tension the belts, control belt test force

Tensioning of the belts according to belt suppliers recommended test force (table on page 5).

Adjust tension with screws M20

Readjustment of the pretensioning device to required tension travel

1. tighten center screws and screws on friction plates
2. loosen M12 hex-screws of fork head, select new position, assure new position of fork head again
3. loosen the shaft and fixing screws again
4. continue the tensioning with screws M20

6 Tighten of the center and fixing screws (friction plates), start of operation

M30 (locking torque 1400 Nm),
M16 (locking torque 210 Nm)

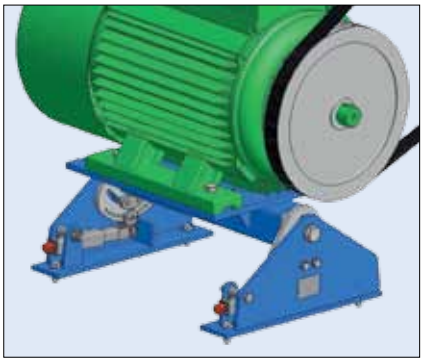

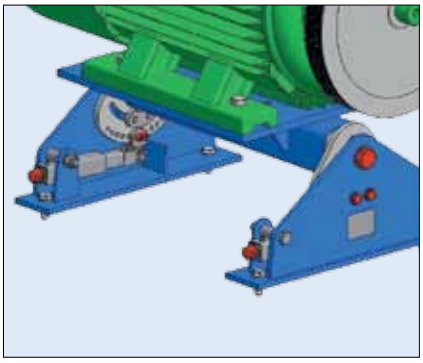

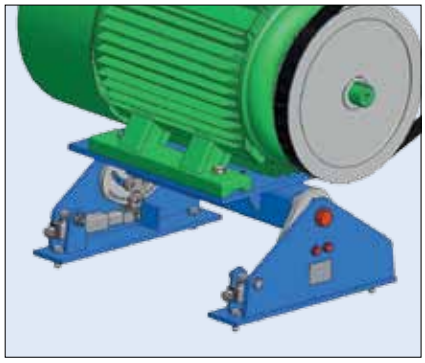

Retension:
Generally retensioning is not necessary, however, we recommend to control the belt tension after a few days of operation (after "running-in" of the belts).

Motorbase
Type MB 100

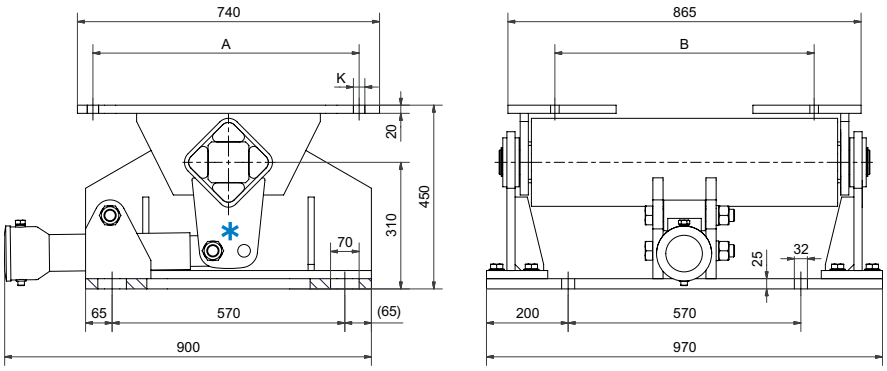

Art.-No.	Type	IEC				NEMA				Weight [kg]
		Motor Frame Size	A	B	K	Motor Frame Size	A	B	K	
02 200 900	**MB 100×750**	315M	508	457	28	447T	457	508	21	490
		315L	508	508	28	449T	457	635	21	
		355S	610	500	28	586/7	584	560	30	
		355M	610	560	28					
		355L	610	630	28					

Details regarding special designs, see pages 14/15.

* For possibly required longer tensioning travel of the motor L-supports, the pretensioning device (3) shall be bolted into the front holes of the fork-head on the rubber suspension element.

1 Motor L-supports
2 Side supports
3 Pretensioning device
4 Rubber suspension element

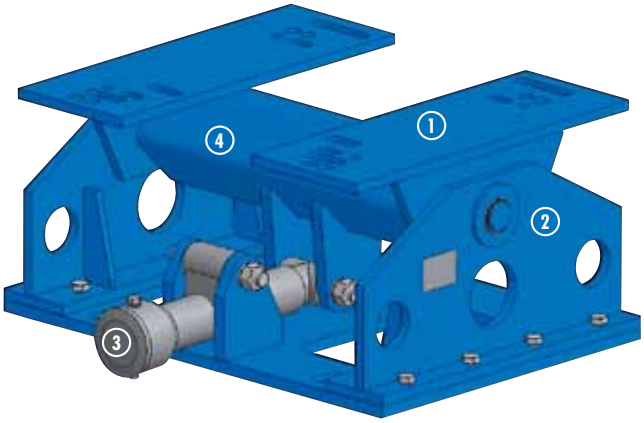

Mounting instructions for MB 100

1 Ascertainment of the ideal motorbase position

- longest tensioning travel, ideal position of the MB
- sufficient travel of the MB
- in this position, insufficient travel is given (contact **ROSTA**)

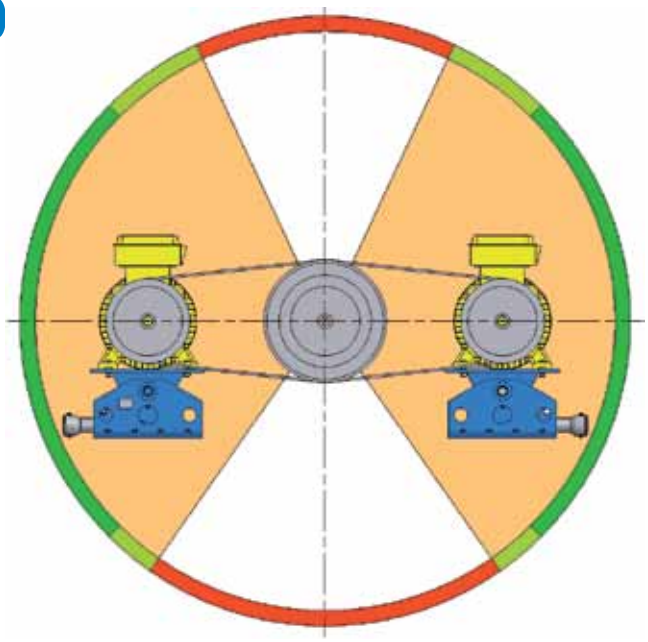

2 Support fixation

4 oblong holes 32×70 mm

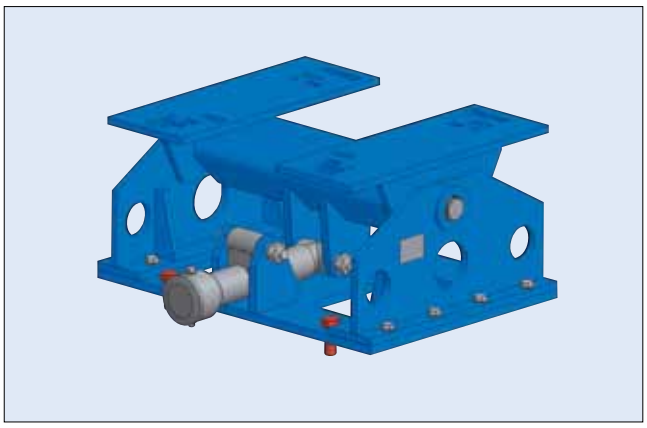

3 Alignment of pulleys and motor fixation

4 screws according relevant motor size

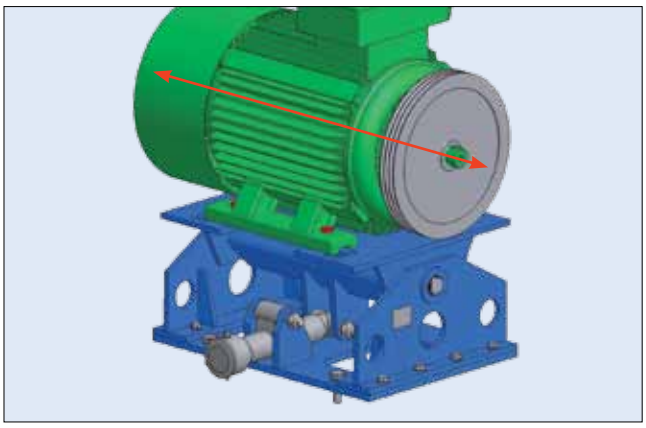

4 Insert and tension the belts, control belt test force

Tensioning of the belts according to belt suppliers recommended test force (table on page 5).

Adjust tension with 24 mm hook wrench

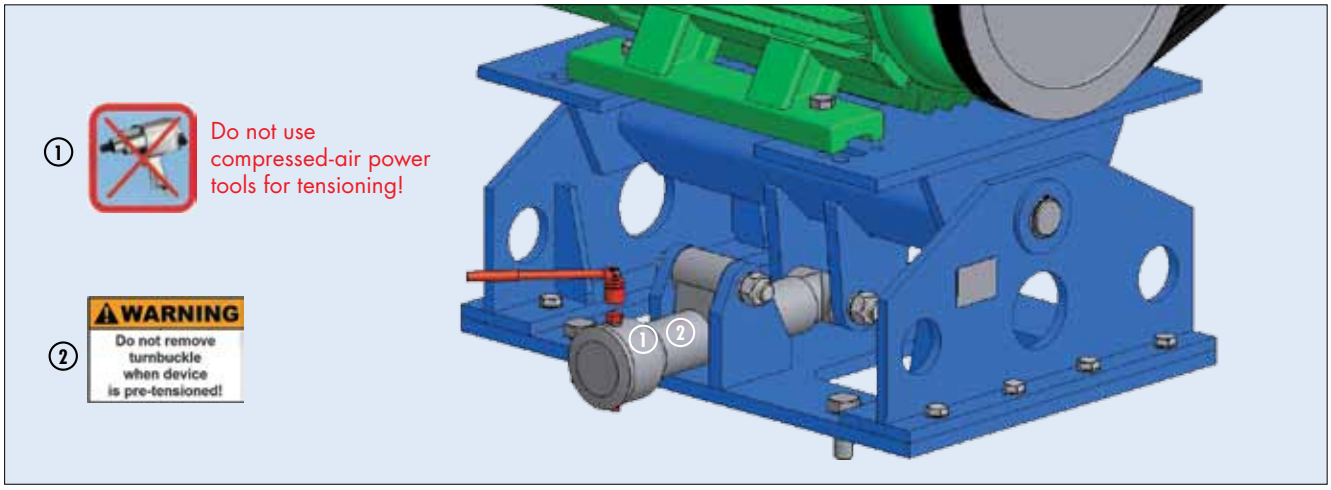

Retension:

Generally retensioning is not necessary, however, we recommend to control the belt tension after a few days of operation (after "running-in" of the belts).

ROSTA-Motorbases in customized design for special applications

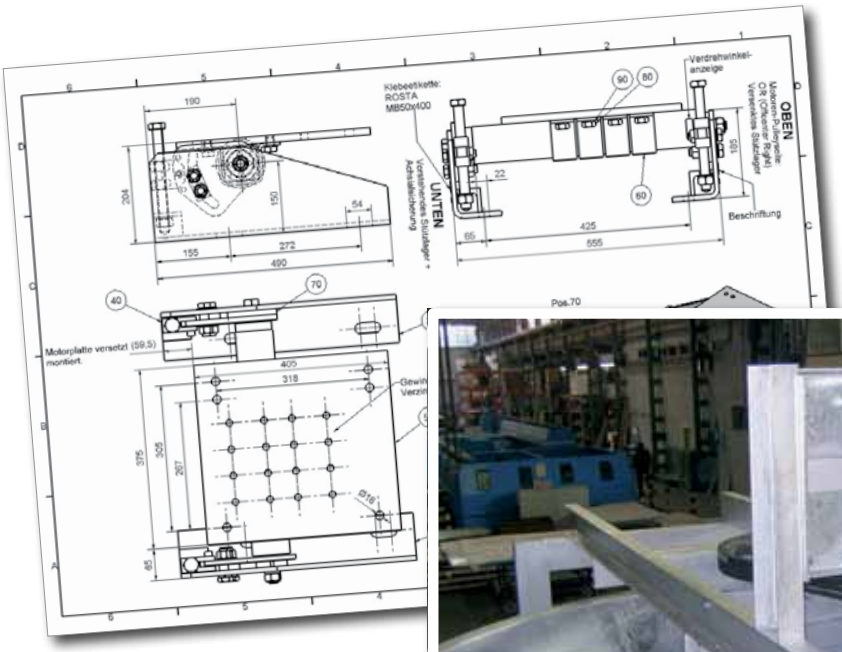

Example 1

Fan drive in heat exchanger with vertically installed motor on MB 50, special

The MB 50 had been equipped with an additional bronze glide bearing to assure the axial position of the motor on the elastic ROSTA-element.

Example 2

Installation of cooling compressors in busses on MB 45 special, equipped with heat-resistant elastic inserts Rubmix 40

In this specific application, the ROSTA Motorbase is fulfilling two main functions: keeps the belt tightened between Diesel-engine and cooling compressor, does prevent the transmission of compressor vibrations into the bus chassis.

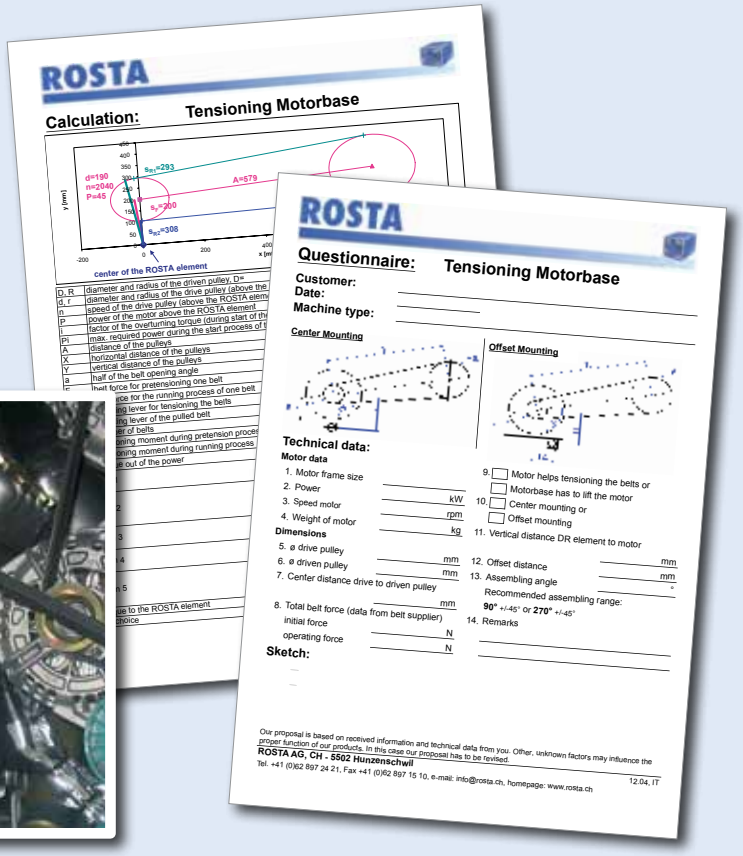

ROSTA

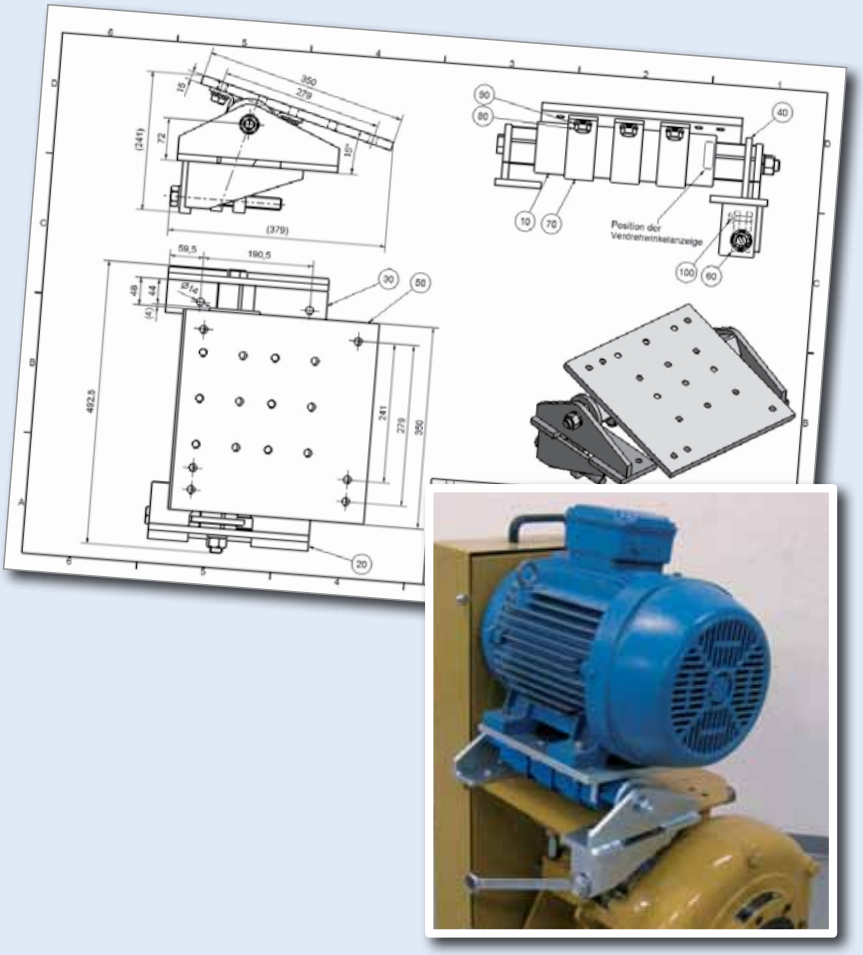

Example 3

Drive motor of slurry-pump (centrifugal pump) installed on MB 50 × 270 special

The ROSTA-Motorbase is assuring the continuous and slippage-free transmission of the required drive torque to maintain the high column of slurry material in mining fluid-transport systems.

Example 4

Heavy-Duty Chain- and Belt-Tensioners made out of Motorbase components

The ROSTA Motorbase-elements are offering extremely high torques to tension heaviest chains and oversized belt drives.

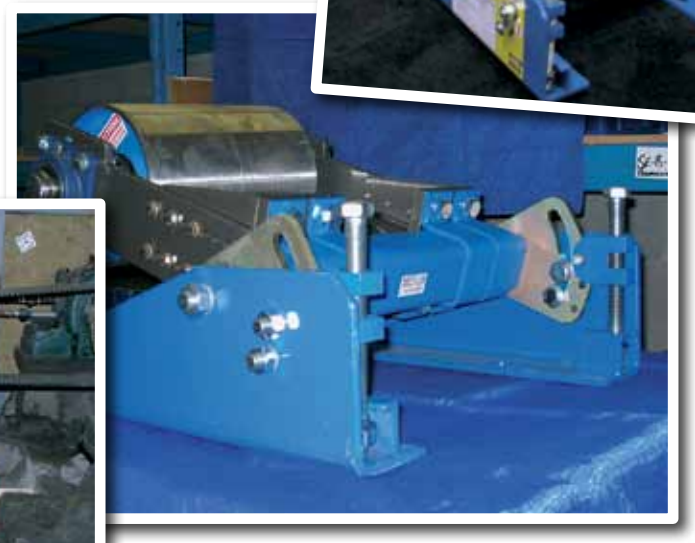

Unlimited possibilities!

A few application examples:

ROSTA
swinging solutions

ROSTA AG
CH-5502 Hunzenschwil
Phone +41 62 897 24 21
Fax +41 62 897 15 10
E-Mail info@rosta.ch
Internet www.rosta.ch

Changes regarding contents reserved.

T2011.773