ROSTA-Oscillating Mountings

Elastic Suspension for Screens and Shaker Conveyors
high dampening – long lifetime – overload proof

ROSTA
swinging solutions

SELECTION TABLE FOR OSCILLATING MOUNTINGS

Guided Shaker Systems (Crank Driven)			
Principle	**One-mass shaker** 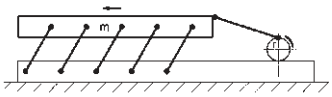	**One-mass shaker with spring accumulators** 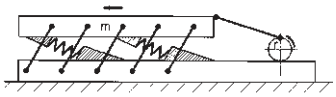	**Two-mass shaker with direct compensation of reaction forces** 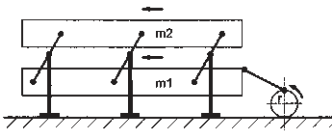
	Single rocker with adaptable length **Pages 40/41**	**Single rocker with adaptable length** **Pages 40/41**	
	Single rocker (fixed centerdistance) **Pages 44/45**	**Single rocker (fixed centerdistance)** **Pages 44/45**	
			Double rocker for systems with direct mass compensation **Pages 46/47**
	Single rocker with adaptable length **Pages 42/43**	**Single rocker with adaptable length** **Pages 42/43**	**Length adjustable double rocker for systems with direct mass compensation** **Pages 42/43**
		Spring accumulator respectively elastic drive head **Pages 48/49/51**	**Spring accumulator respectively elastic drive head** **Pages 48/49/51**
	Drive head for crank transmission **Page 50**	**Drive head for crank transmission** **Page 50**	**Drive head for crank transmission** **Page 50**

(Technical recommendation is blue marked)

SELECTION TABLE FOR OSCILLATING MOUNTINGS

Free Oscillating Systems (Unbalanced Excitation)

One-mass free oscillating screen 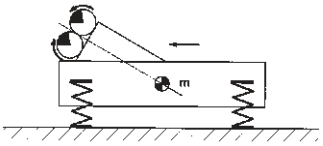	Two-mass free oscillating screen 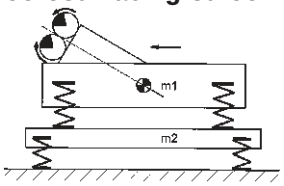	One-mass hanging discharge feeders / sreens 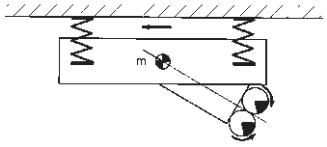	Principle
Suspension of one-mass screens / shakers $f_e \approx 2-3$ Hz Page 55	Suspension of two-mass screens / shakers $f_e \approx 2-3$ Hz Page 55		
Suspension of one-mass screens / shakers $f_e \approx 2-3$ Hz Page 56	Suspension of one-mass screens / shakers $f_e \approx 2-3$ Hz Page 56		
Elastic suspension ideal by impact loading $f_e \approx 2.5-3.5$ Hz Page 57			
Elastic suspension of linear acting feeders and screens $f_e \approx 3-4$ Hz Page 58	Elastic suspension of counter-mass $f_e \approx 3-4$ Hz Page 58		
		Elastic suspension of hanging screens and discharge feeders $f_e \approx 3-4$ Hz Page 59	
Universal-joint suspensions for hanging or supported gyratory sifters Pages 60–63			

(Technical recommendation is blue marked)

ROSTA

1. Oscillating Conveyor Technology in General

Technical development has led to a growing demand for the efficient yet gentle conveying of goods. One of the most economical answers to this need is the oscillating conveyor, which has major advantages over alternative systems:

– simple design without parts requiring a lot of maintenance
– extremely low wear in operation
– screening and separating operations may be performed at the same time.

Oscillating conveyors consist of trough-, box- or tube-shaped conveying units, the oscillation rockers and the oscillating exciter. While oscillating mass forces are set up which lead to two fundamental conveying modes. If the material "slides" forward, we speak of a chute conveyor, but if it is advanced in "short jumps" (microthrows) a shaker conveyor is involved.

Chute conveyors have low frequencies (1–2 Hz) and large amplitudes (up to about 300 mm), and are specially suited for moving material in coarse lumps, as in mining.

Shaker conveyors have high frequencies (up to 10 Hz) and smaller amplitudes (up to about 20 mm). They are suitable for moving almost all products, provided these do not cake or stick together, over short to medium distances, particularly hot and severe wearing materials.

2. Crank Shaft Driven Shaker Conveyor Systems

2.1. One-mass Oscillation System with Positive Slider Crank Drive

This simplest oscillating conveyor design (fig. 1) is the most economical and consists of the oscillating trough (I), the rocker suspension (B), the drive (CD) and base frame (III). Because there is no mass compensation here, it is employed primarily where dynamic forces exerted to the foundation are small, i.e. where the trough acceleration does not exceed 1.6 g. In any case the conveyor must be installed on a solid substructure (in a basement, on a heavy base frame or solid floor).

The direction of conveying is geared by the rocker suspension (B), so that we speak of unidirectional conveyors. As rocker suspension we recommend our types AU, AR, AS-P or AS-C (see pages 40–45).

The system is advantageously driven by a crank mechanism, in which our oscillating drive head (C) is used as a positive, elastic torsion bearing.

With this crank drive, low frequencies with long throws are achieved in simple fashion, as are essential for the design of long shakers.

The amplitude corresponds to the crank radius R, while the throw is 2 R. The frequencies of such slider crank oscillating troughs lies between 5 and 10 Hz, with throws between 10 and 40 mm. The movement of material can be controlled during operation by variable-speed motors or drives. In one-mass oscillation systems the force introduction i.e. the main direction of oscillation X must be directed ahead of the centre of gravity S (fig. 1).

The crank shaft has to be driven by belts, in order to compensate the shocks at stroke ends!

Fig. 1

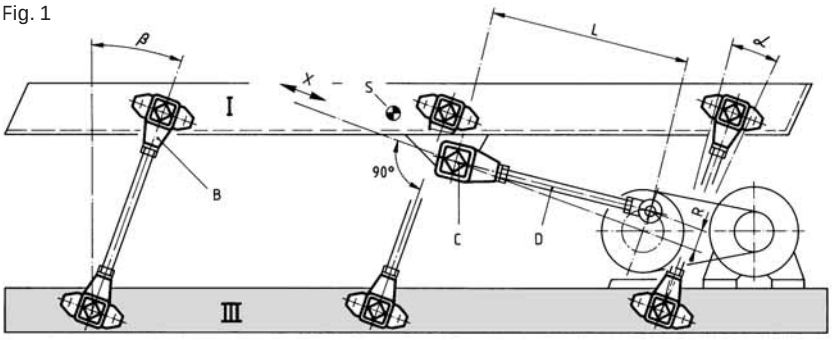

B ROSTA oscillating mountings type AU, AS or AR
C ROSTA oscillating drive head type ST
D Connecting rod
L Sliding crank lenght
R Sliding crank radius (amplitude)
S Center of gravity of trough (mass)
X Main oscillating direction
α Oscillating angle max. 10° (± 5°)
β Rocker angle approx. 20° to 30°
I Trough (mass)
III Frame

2.2. Two-mass Oscillation System with Positive Slider Crank Drive (Direct Compensation of Reaction Forces)

Higher conveying performance calls for higher frequencies and amplitudes, which inevitably cause stronger dynamic forces to be exerted on the foundation. In the two-mass oscillation system these forces are minimized due to the direct mass compensation, allowing even long and heavy conveyors to be mounted on relatively light platform structures or on upper floors.

Fig. 2 shows a shaker conveyor of this kind schematically. With trough I and the countermass (or trough) II having the same mass, the latter performing a compensatory oscillating movement in the opposite sense, the oscillation neutral point O lies in the middle of the double suspension B. If the stationary support III holds the suspension at point O, it sustains only static forces, so that the machine frame III is virtually no longer subject to dynamic loading. In this case we speak of direct mass compensation. (If the counter-mass is used as feeding trough, please note that transport direction is identic with trough I.)

Our elements type AD-P, AD-C and AR are fitted as double-suspension to support the two troughs on the machine frame (see pages 42/43 and 46/47). The system is driven by eccentric crank with the ROSTA drive head ST.

In contrast to the one-mass system, in the two-mass shaker systems the force introduction may be adapted wheresoever to the trough (mass I) or to the counter weight (mass II).

Fig. 2

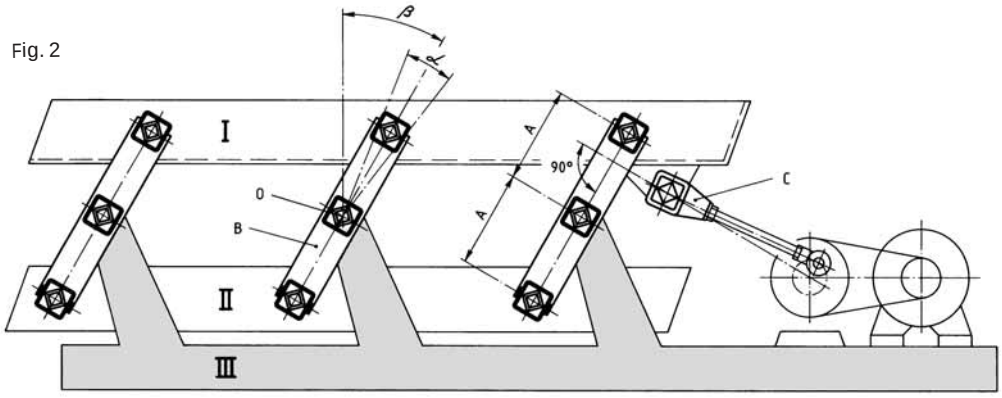

B ROSTA double suspensions type AD or AR
C ROSTA oscillating drive head type ST
α Oscillation angle max. 10° (±5°)
β Rocker angle approx. 20° to 30°
I Trough (mass)
II Countermass
III Frame

2.3. Resonance Oscillating Conveyor with Positive Slider Crank Drive

To reduce the driving forces necessary, the shaker conveyors as presented in 2.1 and 2.2 are operated also as a resonance system. Here the suspensions B (figs. 1 and 2) are key components. Also the spring accumulators, consisting of two elements type DO-A, are supporting the dynamic stiffnes of the trough and are offering a harmonic oscillation of the system, close by the resonance (see pages 62/63). Unlike conventional designs, our suspensions embodying ROSTA rubber suspension units are able to perform four important functions simultaneously:

– supporting the static load
– forming an oscillating system in which the dynamic spring stiffness is determining the resonance drive-capacity
– dictating the direction of oscillation
– insulating vibration and structure-borne noise

To obtain a system as close to resonance as possible, based on the dynamic spring value of the ROSTA elements, various data of the projected shaker conveyor trough are needed. The number and size of the suspensions depend on the weight of the oscillating mass, on the conveying capacity desired, on the stroke and drive frequency. This drive frequency must as a rule be 10% lower than the natural frequency of the installation. Typical calculations of this may be found on pages 41–51.

3. Terminology and Calculation (Crank Shaft Driven Systems)

3.1. Terminology

Symbol	*Unit*	*Term*	*Symbol*	*Unit*	*Term*
a	m/s²	Acceleration	m	kg	Mass
A	mm	Center distance rockers	n_{err}	min^{-1}	Revolutions per minute
c_d	N/mm	Dynamic spring value (rocker)	R	mm	Crank radius
c_t	N/mm	Total spring value (system)	S	–	Center of gravity
f_e	Hz	Natural frequency (elements)	sw = 2 · R	mm	Throw (peak to peak)
f_{err}	Hz	Excitation frequency	v_{th}	m/min cm/s	Theoretical velocity (material)
F	N	Force	z	–	Quantity (number)
g	9.81 m/s²	Gravitational acceleration	W	%	Degree of isolation
K	$\frac{\text{machine acc.}}{\text{grav. acc.}}$	Oscillating machine factor	α	°	Oscillation angle
			β	°	Rocker angle (inclination)

3.2. Calculation

Formulas for calculating oscillating machines based on the fundamental knowledges about oscillation theories.

Total spring value (system) $c_t = m \cdot \left(\frac{2\pi}{60} \cdot n_{err}\right)^2 \cdot 0.001$ [N/mm]

Excitation frequency $f_{err} = \frac{1}{2\pi} \cdot \sqrt{\frac{c_t \cdot 1000}{m}}$ [Hz]

Number of rockers for resonance operation $z = \frac{c_t}{0.9 \cdot c_d}$ [piece]

Oscillating machine factor (g-factor of acceleration) $K = \frac{\left(\frac{2\pi}{60} \cdot n_{err}\right)^2 \cdot R}{9810}$ [–]

Acceleration force $F = K \cdot m \cdot g$ [N]

Required driving power (approximation) $P \approx \frac{R \cdot K \cdot m \cdot g \cdot n_{err}}{9550 \cdot 1000 \cdot \sqrt{2}}$ [kW]

The theoretical material speed of a horizontally positioned shaker conveyor with rocker arms installed under an inclination angle of 30° can be determined out of the left graph. Example: eccentric radius R = 25 mm and n_{err} = 420 min^{-1} is giving an acceleration of ~ 5 g and offering a theoretical material speed of ~ 53 m/min.

It requires two-mass systems with direct mass compensation by accelerations > 1.7 g (one-mass resonance systems with spring accumulators = up to 2.2 g possible).

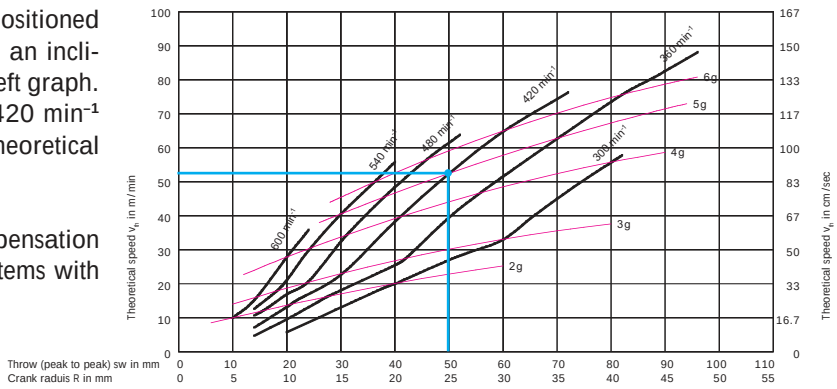

APPLICATIONS

Double rockers on tabacco shaker

Drive head fixation on chip feeder

Support of heavy gyratory sifter with AK

Single rocker on chip feeder

Elastic drive head on tabacco shaker

Rocker fixation on feeder frame

OSCILLATING MOUNTING TYPE AU

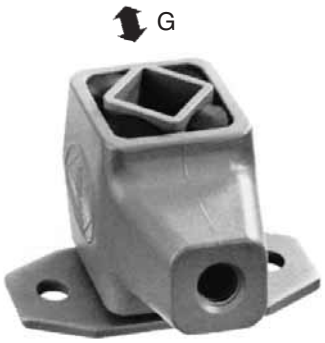

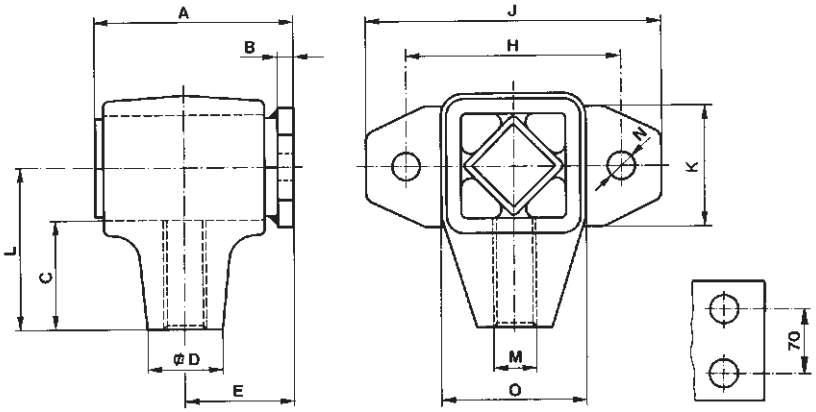

Fixing flange
AU 60

Art. No.	Type	G	n_{err}	Md_d	A	B	C	D	E	H	J	K	L	M	N	O	Weight in kg
07 011 001	AU 15	100	1200	0.44	50	4	29	20	28	50	70	25	40	M10	7	33	0.19
07 021 001	AU 15 L	100	1200	0.44	50	4	29	20	28	50	70	25	40	M10 L	7	33	0.19
07 011 002	AU 18	200	1200	1.32	62	5	31.5	22	34	60	85	35	45	M12	9.5	39	0.34
07 021 002	AU 18 L	200	1200	1.32	62	5	31.5	22	34	60	85	35	45	M12 L	9.5	39	0.34
07 011 003	AU 27	400	800	2.60	73	5	40.5	28	40	80	110	45	60	M16	11.5	54	0.65
07 021 003	AU 27 L	400	800	2.60	73	5	40.5	28	40	80	110	45	60	M16 L	11.5	54	0.65
07 011 004	AU 38	800	800	6.70	95	6	53	42	52	100	140	60	80	M20	14	74	1.55
07 021 004	AU 38 L	800	800	6.70	95	6	53	42	52	100	140	60	80	M20 L	14	74	1.55
07 011 005	AU 45	1600	800	11.60	120	8	67	48	66	130	180	70	100	M24	18	89	2.55
07 021 005	AU 45 L	1600	800	11.60	120	8	67	48	66	130	180	70	100	M24 L	18	89	2.55
07 011 006	AU 50	2500	600	20.40	145	10	70	60	80	140	190	80	105	M36	18	93	6.70
07 021 006	AU 50 L	2500	600	20.40	145	10	70	60	80	140	190	80	105	M36 L	18	93	6.70
07 011 007	AU 60	5000	400	38.20	233	15	85	80	128	180	230	120	130	M42	18	116	15.70
07 021 007	AU 60 L	5000	400	38.20	233	15	85	80	128	180	230	120	130	M42 L	18	116	15.70

G = max. loading in N per unit or rocker suspension
n_{err} = max. frequency in min^{-1} at ∢ 10°, from zero ∢ ± 5°
Md_d = dynamic torque Nm / ° at ∢ ± 5°, in frequency range 300 – 600 min^{-1}
Mountings for higher loads available on request

Material Structure

The housings up to type AU 45 are made out of light metal die cast, from type AU 50 in nodular cast; inner square and fixation flange in steel.

Guidelines for Fitting

The rocker angle β of the oscillating mounting is 10° to 30° according to experience, depending largely on the conveying performance and the material to be moved. To secure optimal performance the troughs, screens etc. must be designed stiff and rigid. If the available space does not allow the mountings to be fitted from the side, they may also be placed between the trough and the base frame. Here the threaded connecting rod allows optimal levelling in all cases.

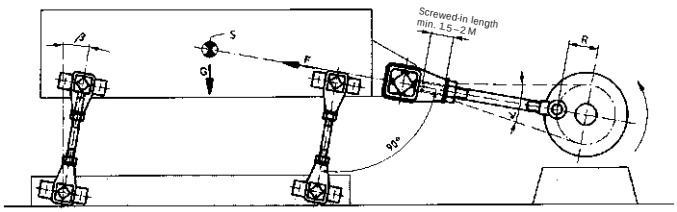

OSCILLATING MOUNTING TYPE AU

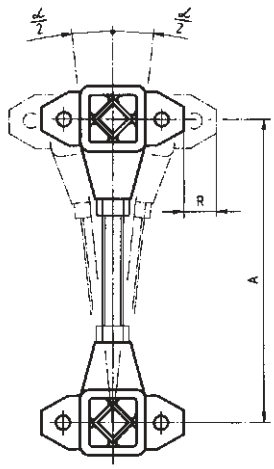

To calculate the dynamic spring value of an oscillating mounting, for example 2 AU 27, operating close to resonance.

Given:

Dynamic torque Md_d	= 2.6 Nm / °
Mounting with distance A between centres	= 200 mm

Wanted:

Dynamic spring value c_d

$$c_d = \frac{Md_d \cdot 360 \cdot 1000}{A^2 \cdot \pi} = \frac{2.6 \cdot 360 \cdot 1000}{200^2 \cdot \pi} = 7.4 \text{ N/mm}$$

Typical Calculation

Given:

Weight of trough	= 200 kg
Material on trough	= 50 kg
of this 20 % coupling effect	= 10 kg
Total weight of oscillating mass m (trough and coupling effect)	= 210 kg
Eccentric radius R	= 14 mm
Speed n_{err}	= 320 min^{-1}

Oscillating machine factor $K = \frac{\left(\frac{2\pi}{60} \cdot n_{err}\right)^2 \cdot R}{9810}$ = 1.6

Total spring value $c_t = m \cdot \left(\frac{2\pi}{60} \cdot n_{err}\right)^2 \cdot 0.001$ = 235.8 N / mm

Wanted:

Number of oscillating mountings each comprising 2 elements type AU 27

a) in resonance operation

Here the total spring value of the mountings must be about 10 % above the total spring value c_t of the installation. From this follows:
Spring value c_d of an oscillating mounting consisting of 2 AU 27 spaced at 200 mm = 7.4 N / mm

Number of mountings $z = \frac{c_t}{0.9 \cdot c_d} = \frac{235.8}{0.9 \cdot 7.4}$ = 35.4 pieces

Selected: 36 mountings each comprising 2 AU 27 = 72 x AU 27

b) without resonance operation

Here the total weight G must be taken up by the total number of oscillating mountings. The admissible loading of one mounting comprising 2 AU 27 = 400 N

Number of mountings $z = \frac{m \cdot g}{G} = \frac{210 \cdot 9.81}{400}$ = 5.15 pieces

Selected: 6 oscillating mountings each comprising 2 AU 27 = 12 x AU 27

Connecting Rod

The connecting rod is provided by the customer, preferably with left- / right-hand thread. Together with the associated oscillating mountings AU the distance between elements A can then be levelled steplessly. Lower costs may be attained, though at the price of rougher levelling, by using commercial rods with right-head thread only. In any case the appropriate screwed-in length must be observed.

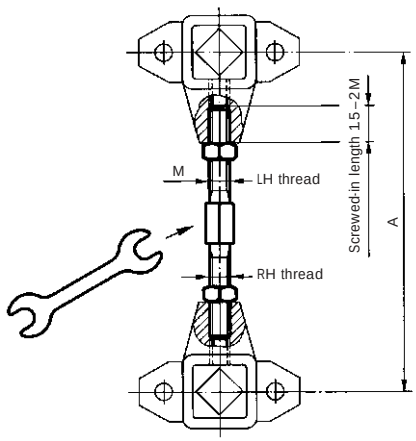

OSCILLATING MOUNTING TYPE AR

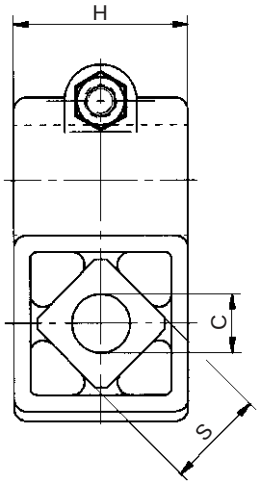

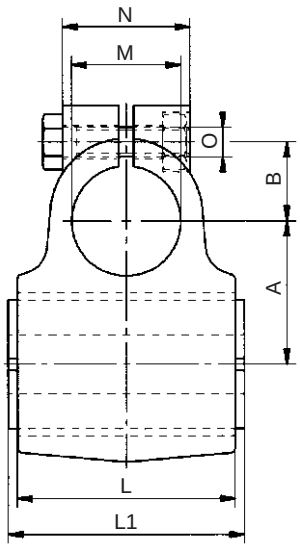

Art. No.	Type	G K=2	G K=3	G K=4	n_{err}	Md_d	A	B	C	H	L	L1	M	N	O	S	Weight in kg
							Dimensions in mm										
07 291 003	AR 27	300	240	200	590	2.6	$39^{\pm 0.2}$	21.5	$16^{+0.5}_{+0.3}$	48	60	$65^{0}_{-0.3}$	30	35	M8	27	0.45
07 291 004	AR 38	600	500	400	510	6.7	$52^{\pm 0.2}$	26.5	$20^{+0.5}_{+0.2}$	64	80	$90^{0}_{-0.3}$	40	50	M8	38	0.95

G = max. load in G per rocker
K = oscillating machine factor
n_{err} = max. frequency in min^{-1} with $\sphericalangle \pm 5°$
Md_d = dynamic spring value in Nm/° at $\sphericalangle \pm 5°$, in frequency range 300 – 600 min^{-1}

Material Structure

Housings in light metal die cast, inner square in light alloy profile.

Single Drive Head

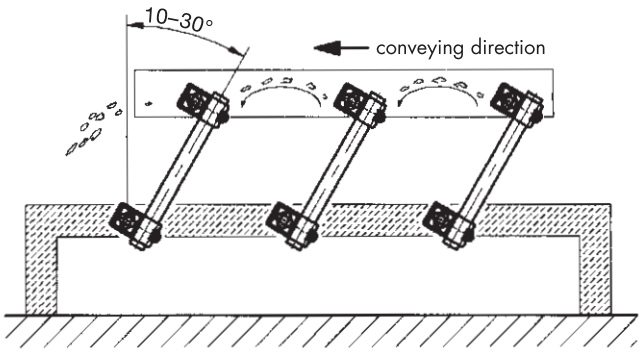

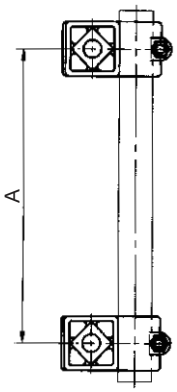

ROSTA oscillating mountings type AR in **single rocker configuration:** mounted on a round tube. It is best to adjust the desired center-distance between the axes on a surface plate and to subsequently tighten the clamp in order to frictionally connect the circular tube. The unit is fixed to the trough and the machine frame by means of frictional connection to the inner square section of the element by means of a bolt.

Dynamic Spring Value

The dynamic spring value c_d of an oscillation unit consisting of 2 elements, type AR, is calculated as following:

$$c_d = \frac{Md_d \cdot 360 \cdot 1000}{A^2 \cdot \pi} = [N/mm]$$

ROSTA

OSCILLATING MOUNTING TYPE AR

Double Drive Head

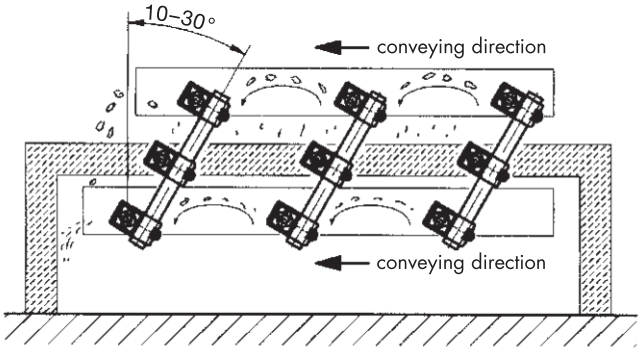

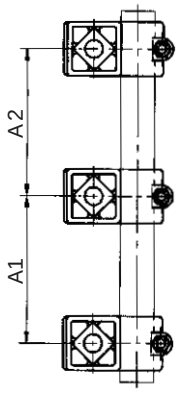

ROSTA oscillating mountings type AR in **double rocker configuration:** These elements are mounted in the same way as the single rocker arms. However, the material thickness of the round connection tube must be adapted according to the final center distances (see table on bottom left of this page). The double rocker arm allows easy installation in high-speed two-mass shaker conveyors with direct balancing. The counterweight can be used as additional conveyor trough. The material flows in the same direction, both on the trough and the counterweight.

Bidirectional Drive Head

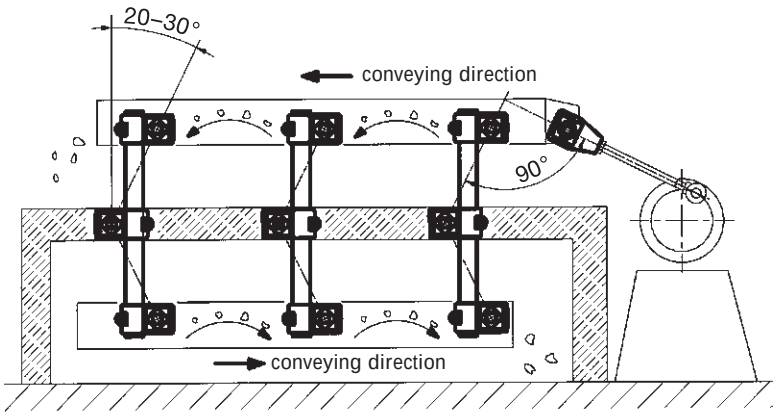

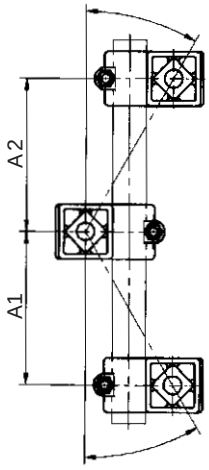

ROSTA oscillating mountings type AR in **boomerang configuration** for bidirectional conveying. The double rocker is mounted vertically, the middle element is rotated by 180°. The angles of the double rocker go in opposite direction, causing the material on the counterweight to move in opposite direction, too. The bidirectional conveying allows an easier processing of the bulk material, but still guarantees a perfect balancing of masses for high-speed oscillating conveyors.

Dynamic Spring Value

The dynamic spring value c_d of an oscillation unit consisting of 3 elements, type AR, is calculated as following:

$$c_d = \frac{3 \cdot 360 \cdot Md_d \cdot 1000}{4 \cdot \pi} \cdot \left(\frac{1}{A1^2} + \frac{1}{A2^2} \right) = [N/mm]$$

c_d = dynamic spring value in N/mm with torsion ∢ ± 5°, frequency range 300 – 600 min^{-1}

Dimensions of the Connecting Tubes

(to be provided by the customer)

Type	Dimensions in mm Tube Ø	min. thickness of tube	max. A1 or A2
AR 27	30	3*	160
	30	4	220
	30	5	300
AR 38	40	3*	200
	40	4	250
	40	5	300

* for single drive heads always use a thickness of 3 mm

ROCKER SUSPENSION TYPE AS-P

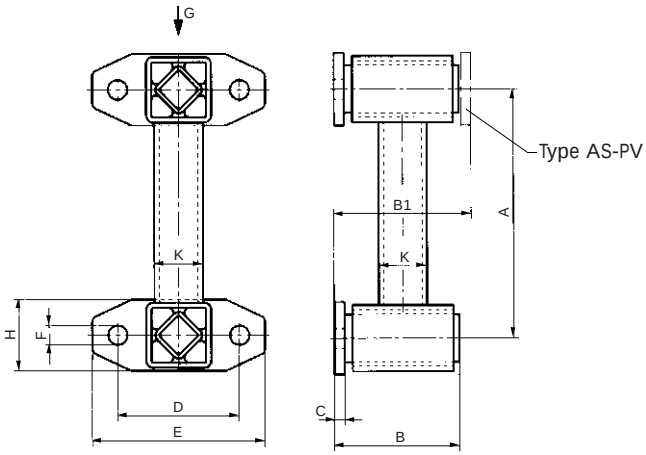

Type AS-PV with one offset flange

Art. No.	Type	G	n_{err}	sw	c_d	A	B	C	D	E	F	H	ØK	Weight in kg
07 081 001	△ AS-P 15	100	1200	17	5	100	50	4	50	70	7	25	18	0.54
07 081 002	AS-P 18	200	1200	21	10	120	62	5	60	85	9.5	35	24	0.81
07 081 003	AS-P 27	400	800	28	12	160	73	5	80	110	11.5	45	34	1.79
07 081 004	AS-P 38	800	800	35	19	200	95	6	100	140	14	60	40	3.57
07 081 005	△ AS-P 45	1600	800	35	33	200	120	8	130	180	18	70	45	5.52
07 081 006	△ AS-P 50	2500	600	44	38	250	145	10	140	190	18	80	60	8.27

Art. No.	Type	G	n_{err}	sw	c_d	A	B1	C	D	E	F	H	ØK	Weight in kg
07 091 001	△ AS-PV 15	100	1200	17	5	100	56	4	50	70	7	25	18	0.54
07 091 002	AS-PV 18	200	1200	21	10	120	68	5	60	85	9.5	35	24	0.81
07 091 003	AS-PV 27	400	800	28	12	160	80	5	80	110	11.5	45	34	1.79
07 091 004	AS-PV 38	800	800	35	19	200	104	6	100	140	14	60	40	3.57
07 091 005	△ AS-PV 45	1600	800	35	33	200	132	8	130	180	18	70	45	5.52
07 091 006	△ AS-PV 50	2500	600	44	38	250	160	10	140	190	18	80	60	8.27

G = max. loading in N per suspension
n_{err} = max. frequency in min^{-1} at ∢ 10°, from zero ∢ ±5°
sw = max. amplitude in mm
c_d = dynamic spring value in N/mm ∢ ±5°, in frequency range 300 – 600 min^{-1}
Suspensions for higher loads available on request

△ available on request

Material Structure

Rocker arm made out of welded steel structure; inner square and fixation flange in steel.

Guidelines for Fitting

The rocker angle β of the rocker suspensions is 10° to 30° according the experience, depending largely on the conveying performance and the material to be moved. To secure optimal performance the troughs, screens etc. must be designed stiff and rigid. If the available space does not allow the suspensions to be fitted from the side, they may also be placed between the trough and the base frame using fitting parts to be produced by the customer.

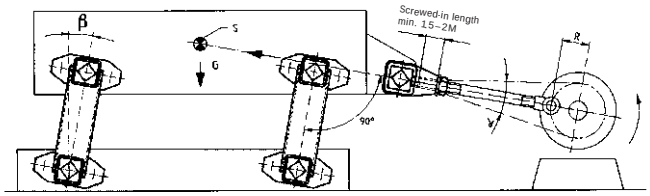

ROSTA

ROCKER SUSPENSION TYPE AS-C

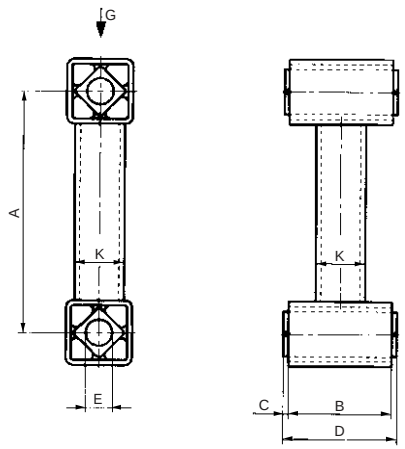

Art. No.	Type	G	n_{err}	sw	c_d	A	B	C	D	E	ØK	Weight in kg
07 071 001	△ AS-C 15	100	1200	17	5	100	40	2.5	45	$10^{+0.4}_{+0.2}$	18	0.38
07 071 002	AS-C 18	200	1200	21	10	120	50	2.5	55	$13^{0}_{-0.2}$	24	0.56
07 071 003	AS-C 27	400	800	28	12	160	60	2.5	65	$16^{+0.5}_{+0.3}$	34	1.31
07 071 004	AS-C 38	800	800	35	19	200	80	5	90	$20^{+0.5}_{+0.2}$	40	2.60
07 071 005	△ AS-C 45	1600	800	35	33	200	100	5	110	$24^{+0.5}_{+0.2}$	45	3.94
07 071 006	△ AS-C 50	2500	600	44	38	250	120	5	130	$30^{+0.5}_{+0.2}$	60	6.05

G = max. loading in N per suspension
n_{err} = max. frequency in min^{-1} at ∢ 10°, from zero ∢ ±5°
sw = max. amplitude in mm
c_d = dynamic spring value in N/mm at ∢ ±5°, in frequency range 300 – 600 min^{-1}
Suspensions for higher loads available on request

△ available on request

Material Structure

Rocker arm made out of welded steel structure; inner square in light alloy profile.

Typical Calculation

Given:

Weight of trough	= 200 kg
Material on trough	= 50 kg
of this 20 % coupling effect	= 10 kg
Total weight of oscillating mass m (trough and coupling effect)	= 210 kg
Eccentric radius R	= 14 mm
Speed n_{err}	= 320 min^{-1}
Oscillating machine factor $K = \frac{\left(\frac{2\pi}{60} \cdot n_{err}\right)^2 \cdot R}{9810}$	= 1.6
Total spring value $c_t = m \cdot \left(\frac{2\pi}{60} \cdot n_{err}\right)^2 \cdot 0.001$	= 235.8 N/mm

Wanted:

Number of double rocker suspensions of size 27 for example

a) in resonance operation

Here the total spring value of the suspensions must be about 10 % above the total spring value c_t of the installation. From this follows: Spring value c_d of the rocker suspension AS 27 = 12 N/mm

Number of suspensions $z = \frac{c_t}{0.9 \cdot c_d} = \frac{235.8}{0.9 \cdot 12}$ = 21.8 pieces

Selected: 22 of AS-P 27 or AS-C 27

b) without resonance operation

Here the total weight G must be taken up by the total number of rocker suspensions. The admissible loading of one AS 27 suspension is 400 N

Number of suspensions $z = \frac{m \cdot g}{G} = \frac{210 \cdot 9.81}{400}$ = 5.15 pieces

Selected: 6 of AS-P 27 or AS-C 27

DOUBLE SUSPENSION TYPE AD-P

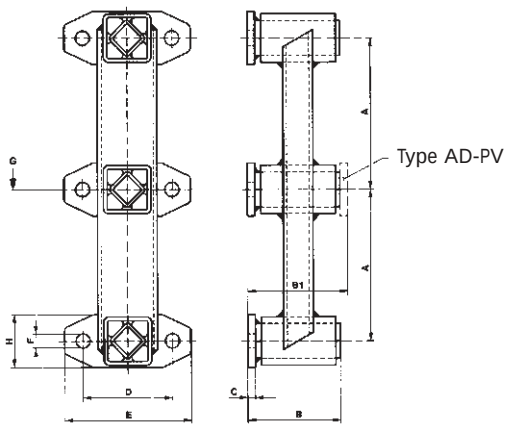

Type AD-PV with offset flanges

Art. No.	Type	G K = 2	G K = 3	G K = 4	n_{err}	sw	c_d	A	B	C	D	E	F	H	Weight in kg
07 111 001	AD-P 18	150	120	100	640	17	22	100	62	5	60	85	9.5	35	1.21
07 111 002	AD-P 27	300	240	200	590	21	32	120	73	5	80	110	11.5	45	2.55
07 111 003	AD-P 38	600	500	400	510	28	45	160	95	6	100	140	14	60	5.54
07 111 004	△ AD-P 45	1200	1000	800	450	35	50	200	120	8	130	180	18	70	8.51
07 111 005	△ AD-P 50	1800	1500	1200	420	44	55	250	145	10	140	190	18	80	12.90

Art. No.	Type	G K = 2	G K = 3	G K = 4	n_{err}	sw	c_d	A	B_1	C	D	E	F	H	Weight in kg
07 121 001	AD-PV 18	150	120	100	640	17	22	100	68	5	60	85	9.5	35	1.21
07 121 002	AD-PV 27	300	240	200	590	21	32	120	80	5	80	110	11.5	45	2.55
07 121 003	AD-PV 38	600	500	400	510	28	45	160	104	6	100	140	14	60	5.54
07 121 004	△ AD-PV 45	1200	1000	800	450	35	50	200	132	8	130	180	18	70	8.51
07 121 005	△ AD-PV 50	1800	1500	1200	420	44	55	250	160	10	140	190	18	80	12.90

G = max. loading in N per suspension
K = oscillating machine factor
n_{err} = max. frequency in min^{-1} at ∢ 10°, from zero ∢ ±5°
sw = max. amplitude in mm
c_d = dynamic spring value in N/mm at ∢ ±5°, in frequency range 300 – 600 min^{-1}
Suspensions for higher loads or asymmetric distances between centres A available on request

△ available on request

Material Structure

Rocker arm made out of welded steel structure; inner square and fixation flange in steel.

Guidelines for Fitting

The rocker angle β of the rocker suspensions is 10° to 30° according to experience, depending largely on the conveying performance and the material to be moved. To secure optimal performance the troughs, screens etc. must be designed stiff and rigid. Types AD-P are intended for flange mounting. Types AD-C for central fixing.

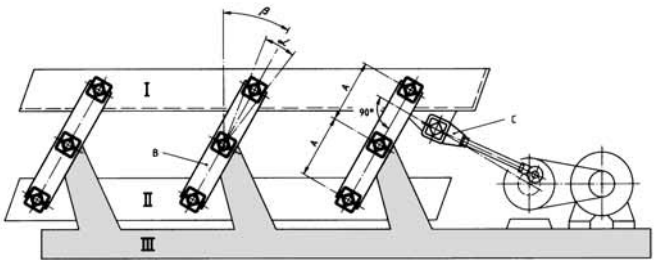

ROSTA

DOUBLE SUSPENSION TYPE AD-C

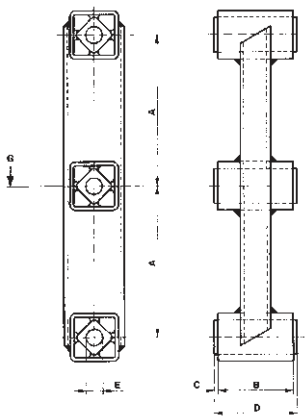

Art. No.	Type	G K = 2	G K = 3	G K = 4	n_{err}	sw	c_d	A	B	C	D	E	Weight in kg
07 101 001	AD-C 18	150	120	100	640	17	22	100	50	2.5	55	$13^{0}_{-0.2}$	0.84
07 101 002	AD-C 27	300	240	200	590	21	32	120	60	2.5	65	$16^{+0.5}_{+0.3}$	1.84
07 101 003	AD-C 38	600	500	400	510	28	45	160	80	5	90	$20^{+0.5}_{+0.2}$	4.09
07 101 004	△ AD-C 45	1200	1000	800	450	35	50	200	100	5	110	$24^{+0.5}_{+0.2}$	6.08

G = max. loading in N per suspension
K = oscillating machine factor
n_{err} = max. frequency in min^{-1} at ∢ 10°, from zero ∢ ±5°
sw = max. amplitude in mm
c_d = dynamic spring value in N/mm at ∢ ±5°, in frequency range 300 – 600 min^{-1}
Suspensions for higher loads or asymmetric distances between centres A available on request

△ available on request

Material Structure

Rocker arm made out of welded steel structure; inner square in light alloy profile.

Typical Calculation

Given:

Weight of trough	= 200 kg
Weight of counter mass	= 200 kg
Material on trough	= 50 kg
of this 20 % coupling effect	= 10 kg
Total weight of oscillating mass m (trough, counter mass and coupling effect)	= 410 kg
Eccentric radius R	= 14 mm
Speed n_{err}	= 360 min^{-1}
Ocillating machine factor $K = \frac{\left(\frac{2\pi}{60} \cdot n_{err}\right)^2 \cdot R}{9810}$	= 2.0
Total spring value $c_t = m \cdot \left(\frac{2\pi}{60} \cdot n_{err}\right)^2 \cdot 0.001$	= 582.7 N/mm

Wanted:
Number of double rocker suspensions of size 38 for example

a) in resonance operation
Here the total spring value of the suspensions must be about 10 % above the total spring value c_t of the installation. From this follows:
Spring value c_d of the rocker suspension AD 38 = 45 N/mm

Number of suspensions $z = \frac{c_t}{0.9 \cdot c_d} = \frac{582.7}{0.9 \cdot 45}$ = 14.4 pieces

Selected: 14 of AD-P 38 or
AD-C 38

b) without resonance operation
Here the total weight G must be taken up by the total number of rocker suspensions. The oscillating machine factor K = 2.0 must be taken into account, also the admissible loading of one AD 38 under acceleration 2 g = 600 N

Number of suspensions $z = \frac{m \cdot g}{G} = \frac{410 \cdot 9.81}{600}$ = 6.7 pieces

Selected: 8 of AD-P 38 or
AD-C 38

RUBBER SUSPENSION UNIT TYPE DO-A

(as Spring Accumulator)

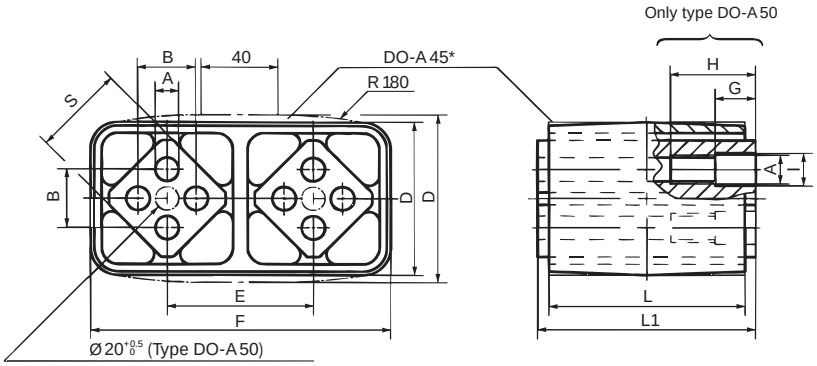

Art. No.	Type	c_d	L	L1 $^{0}_{-0.3}$	A	B	D	E	F	G	H	I	S	Weight in kg
01 041 013	DO-A 45 x 80	220	80	90	12 $^{+0.5}_{0}$	35 $^{\pm 0.5}$	85	73	149.4 $^{+1.6}_{-0.4}$				45	1.85
01 041 014	DO-A 45 x 100	260	100	110	12 $^{+0.5}_{0}$	35 $^{\pm 0.5}$	85	73	149.4 $^{+1.6}_{-0.4}$				45	2.26
01 041 016	DO-A 50 x 120	400	120	130	M 12	40 $^{\pm 0.5}$	89	78	167	30	60	12.25	50	5.50
01 041 019	DO-A 50 x 160	500	160	170	M 12	40 $^{\pm 0.5}$	88	78	166	30	60	12.25	50	7.40
01 041 017	DO-A 50 x 200	600	200	210	M 12	40 $^{\pm 0.5}$	89	78	167	40	70	12.25	50	8.50

* DO-A 45 with convex housing shape

Material Structure

Housing of size 45 is made out of light alloy profile, housing of size 50 in nodular cast; inner squares in light alloy profile with 4 bores for the fixation of connection brackets shaker: frame.

A spring accumulator consists of two ROSTA rubber suspension units type DO-A and a customer supplied connection link **V.** The dynamic spring value of this configuration corresponds to only 50 % of a single DO-A element, due to the effected **double serie-connection,** which is reducing the dynamic stiffness to half.

Element Type	c_d	Perm. osc. angle	R	sw	n_{err}
2 x DO-A45 x 80	110	± 5°	12.5	25.0	520
		± 4°	10.0	20.0	780
		± 3°	7.5	15.0	1280
2 x DO-A45 x 100	130	± 5°	12.5	25.0	480
		± 4°	10.0	20.0	720
		± 3°	7.5	15.0	1200
2 x DO-A50 x 120	200	± 5°	13.6	27.2	420
		± 4°	10.9	21.8	600
		± 3°	8.2	16.4	960
2 x DO-A50 x 160	250	± 5°	13.6	27.2	400
		± 4°	10.9	21.8	570
		± 3°	8.2	16.4	910
2 x DO-A50 x 200	300	± 5°	13.6	27.2	380
		± 4°	10.9	21.8	540
		± 3°	8.2	16.4	860

c_d = dynamic spring value in N / mm
R = permissible radius in mm
sw = max. amplitude (peak to peak) in mm
n_{err} = max. frequency in min^{-1}

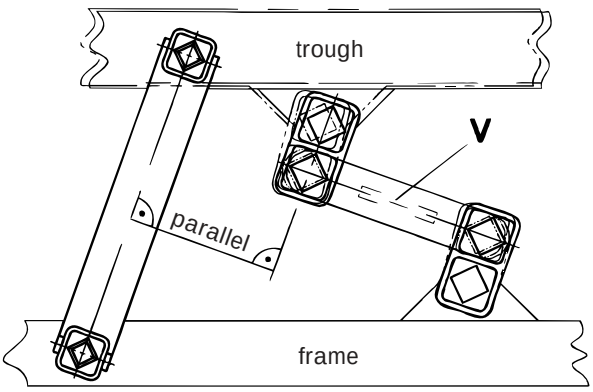

ROSTA

RUBBER SUSPENSION UNIT TYPE DO-A

As Spring Accumulator for One-mass Shaker Conveyor Troughs (Compression/Tension Spring Accumulator)

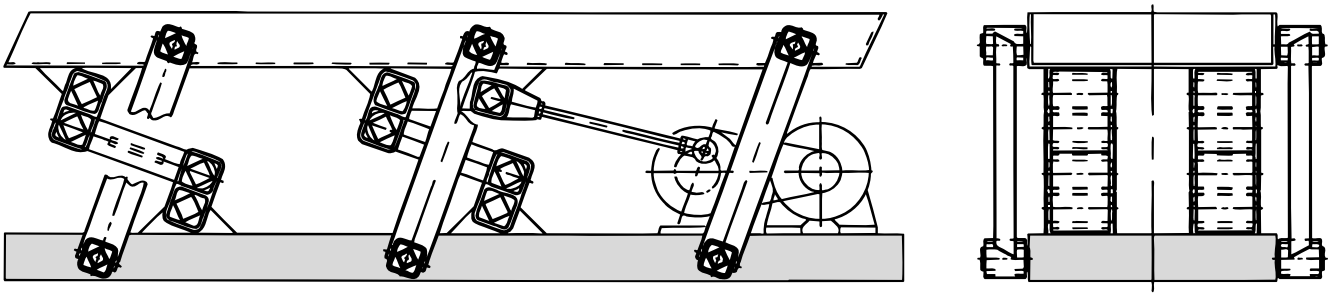

The oscillating conveyor systems are built such that they run very close to the resonance frequency in order to keep the energy consumption down and to improve the fatigue resistance of the structure (trough and frame). The total spring value c_t of the trough should be approximately equal to the stiffness of the oscillating elements. Usually the spring accumulators produce a dynamic rigidity exceeding the one of the rocker arms by far and allowing the oscillating machine to run very close to the resonance frequency in a smooth and harmonic manner.

Typical Calculation

Given:

Oscillating conveyor trough: length: 6.0 m (due to the trough stiffness there are mounted 4 rockers on each side)

Total oscillating mass	m	= 375 kg
Revolutions per minute	n_{err}	= 460 min^{-1}
Crank radius	R	= 6 mm
Oscillating machine factor	K	= 1.4
Total spring value	$c_t = m \cdot \left(\frac{2\pi}{60} \cdot n_{err}\right)^2 \cdot 0.001$	= 870 N/mm

Wanted:

Number of rocker suspensions for operation close to the resonance frequency

Load per rocker $G = \frac{m \cdot g}{z} = \frac{375 \cdot 9.81}{8}$ = 459.8 N

→ 8 AS-C 38 units are necessary

Spring value $c_d = 8 \cdot 19$ N/mm	= 152 N/mm
4 rocker suspensions each consisting of 2 DO-A 50 x 120 elements with c_d = 200 N/mm each	= 800 N/mm
Total c_d of all ROSTA rubber suspension units	= 952 N/mm
Necessary total spring value c_t of trough	= 870 N/mm
Reserve value for overload	= 82 N/mm (= 9.4%)

Suspension Units for Two-mass Oscillating Conveyor Trough

The installation of the two-mass oscillation conveyor system (see page 37) must be done according to the figure on the right.
The accumulators are mounted either on trough I and on the machine frame (see blue elements) or on the frame and on counterweight II.
When calculating the total spring value c_t of the two-mass oscillating machine it is necessary to **fully include** the counterweight.

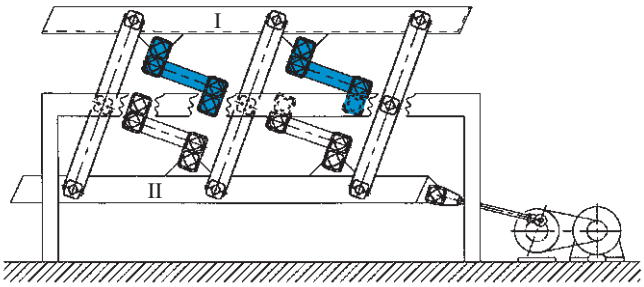

OSCILLATING DRIVE HEAD TYPE ST

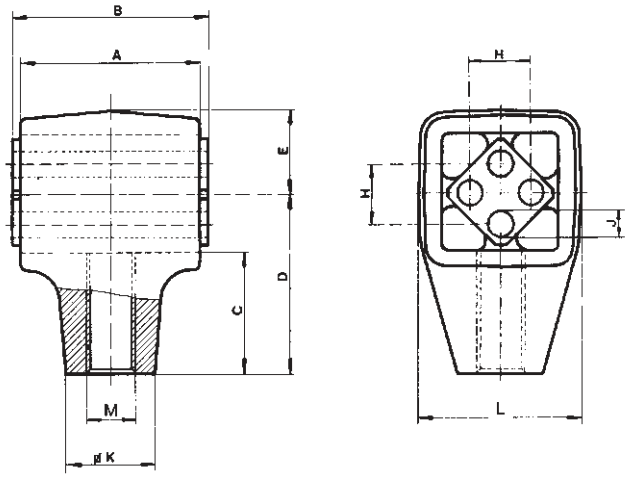

Art. No.	Type	F	∢α max.	n_{err} max. in min^{-1}	A	$B^{0}_{-0.3}$	C	D	E	H	$J^{+0.5}_{0}$	K	L	M	Weight in kg
07 031 001	ST 18	400	10°	1200	50	55	31.5	45	20	$12^{\pm 0.3}$	Ø 6	22	39	M 12	0.19
07 041 001	ST 18 L	400	10°	1200	50	55	31.5	45	20	$12^{\pm 0.3}$	Ø 6	22	39	M 12 L	0.19
07 031 002	ST 27	1000	10°	1200	60	65	40.5	60	27	$20^{\pm 0.4}$	Ø 8	28	54	M 16	0.42
07 041 002	ST 27 L	1000	10°	1200	60	65	40.5	60	27	$20^{\pm 0.4}$	Ø 8	28	54	M 16 L	0.42
07 031 003	ST 38	2000	10°	800	80	90	53	80	37	$25^{\pm 0.4}$	Ø 10	42	74	M 20	1.05
07 041 003	ST 38 L	2000	10°	800	80	90	53	80	37	$25^{\pm 0.4}$	Ø 10	42	74	M 20 L	1.05
07 031 004	ST 45	3500	10°	800	100	110	67	100	44	$35^{\pm 0.5}$	Ø 12	48	89	M 24	1.83
07 041 004	ST 45 L	3500	10°	800	100	110	67	100	44	$35^{\pm 0.5}$	Ø 12	48	89	M 24 L	1.83
07 031 005	ST 50	6000	10°	600	120	130	69.5	105	48	$40^{\pm 0.5}$	M 12 x 40	60	93	M 36	5.50
07 041 005	ST 50 L	6000	10°	600	120	130	69.5	105	48	$40^{\pm 0.5}$	M 12 x 40	60	93	M 36 L	5.50
07 031 006	ST 60	12000	6°	400	200	210	85	130	60	45	M 16 x 22	80	116	M 42	16.30
07 041 006	ST 60 L	12000	6°	400	200	210	85	130	60	45	M 16 x 22	80	116	M 42 L	16.30
07 031 007	ST 80	24000	6°	400	300	310	100	160	77	60	M 20 x 28	100	150	M 52	31.00
07 041 007	ST 80 L	24000	6°	400	300	310	100	160	77	60	M 20 x 28	100	150	M 52 L	31.00

F = max. acceleration force in N

Mountings for higher loads (up to 63 000 N) available on request

Material Structure

The housings up to size ST 45 are made out of light metal die cast, from type ST 50 in nodular cast; inner square in light alloy profile.

Typical Calculation

Given:

Weight of trough = 200 kg
Material on trough = 50 kg
of this 20 % coupling effect = 10 kg
Total weight of oscillating mass m
(trough and coupling effect) = 210 kg
Eccentric radius R = 14 mm
Speed n_{err} = 320 min^{-1}
Connecting rod length L = 600 mm
Ratio R : L = 1 : 0.023; α = ±1.3°

Since the ratio R : L is very low (<0.1) it is possible to achieve harmonic excitation.

Wanted:

Acceleration force F in N

$$F = m \cdot R \cdot 0.001 \cdot \left(\frac{2\pi}{60} \cdot n_{err}\right)^2$$

$$= 210 \cdot 14 \cdot 0.001 \cdot \left(\frac{2\pi}{60} \cdot 320\right)^2 = 3301 \text{ N}$$

Selected: 1 piece of ST 45

Guidelines for Fitting

For ideal conditions the force introduction should be applied slightly ahead of the centre of gravity S and 90° to the angle β. The element axis must be 90° to the longitudinal axis of the trough and run centrally to the centre of gravity S. Fixing is done with shaft screws of 8.8 quality (analogous to fixing the universal joint support).

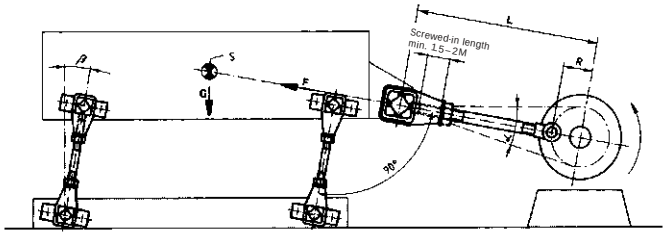

ROSTA

RUBBER SUSPENSION UNIT TYPE DO-A

(as Elastic Drive Head)

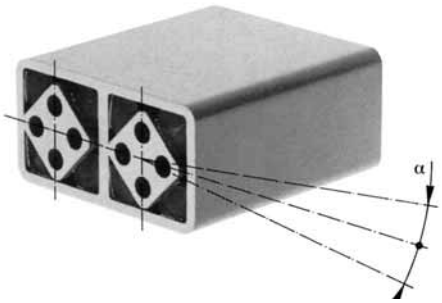

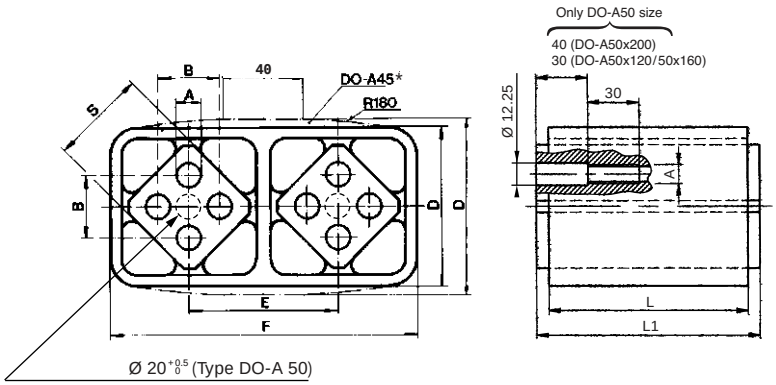

Art. No.	Type	c_d	L	L1 $^{0}_{-0.3}$	A	B	D	E	F	S	Weight in kg
01 041 008	DO-A 27 x 60	160	60	65	$8^{+0.5}_{0}$	$20^{\pm 0.4}$	$47^{\pm 0.15}$	44	$91^{+0.2}_{0}$	27	0.47
01 041 011	DO-A 38 x 80	210	80	90	$10^{+0.5}_{0}$	$25^{\pm 0.4}$	$63^{\pm 0.2}$	60	$123^{+0.3}_{0}$	38	1.15
01 041 013	DO-A 45 x 80	220	80	90	$12^{+0.5}_{0}$	$35^{\pm 0.5}$	85	73	$149.4^{+1.6}_{-0.4}$	45	1.85
01 041 014	DO-A 45 x 100	260	100	110	$12^{+0.5}_{0}$	$35^{\pm 0.5}$	85	73	$149.4^{+1.6}_{-0.4}$	45	2.26
01 041 016	DO-A 50 x 120	400	120	130	M12	$40^{\pm 0.5}$	89	78	167	50	5.50
01 041 019	DO-A 50 x 160	500	160	170	M12	$40^{\pm 0.5}$	88	78	166	50	7.40
01 041 017	DO-A 50 x 200	600	200	210	M12	$40^{\pm 0.5}$	89	78	167	50	8.50

c_d = dynamic spring value N/mm at ∢ ± 5°, in frequency range 300 – 600 min^{-1}
Elements with heigher load capacity are available on request.
* DO-A 45 with convex housing shape

Material Structure

The housings up to size DO-A 45 are made out of light alloy profiles, housing of size 50 in nodular cast; inner squares in light alloy profile with 4 bores for the fixation of connection brackets shaker: eccentric rod.

Typical Calculation

ROSTA rubber suspension units DO-A employed as elastic drive heads are to be selected so that their spring value corresponds roughly to the total spring value. The oscillation angle α of the units must not exceed ± 5°. Elastic drive heads shall only be used in combination with **resonance** shaker conveyors by **continuous** material feeding.

Given:

Total weight of oscillating mass m = 210 kg
Speed n_{err} = 320 min^{-1}
Eccentric radius R = 14 mm

Wanted:

Total spring c_t in N/mm

$$c_t = m \cdot \left(\frac{2\pi}{60} \cdot n_{err}\right)^2 \cdot 0.001 = 210 \cdot \left(\frac{2\pi}{60} \cdot 320\right)^2 \cdot 0.001 = 235.8 \text{ N/mm}$$

Selected: 1 piece of DO-A 45 x 100

Guidelines for Fitting

The elastic slider crank drive may be applied optionally onto the trough I or the contermass II, at the beginning of the trough or elsewhere. Force introduction must be 90° to the angle β of the rocker suspensions. The unit axis must be 90° to the longitudinal axis of the conveyor trough and run centrally with this. Fixing is by shaft screws of 8.8 quality (analogous to fixing the universal joint support). **Elastic drive heads should only be applied in natural frequency shaker systems!**

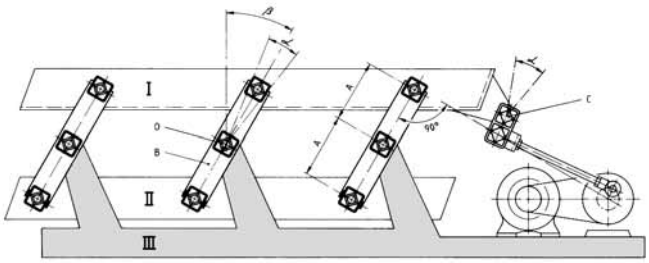

4. Free Oscillation Systems

Freely oscillating one-mass systems (figs. 4 to 6) are supported with ROSTA oscillating mountings type AB, AB-TWIN, AB-D and AB-HD. In this case the angle at which the excitation force is applied on the through determines the direction of oscillation. Thanks to the low frequency support, free oscillators impose only very small dynamic loads on the foundation. However for reasons of structure stiffnes (max. 7 m), only certain conveyor lengths can be executed, otherwise oscillation nodes occur which obstruct conveying.

Free oscillating conveyors are driven by non-positive inertia drives exploiting the action of rotating unbalanced masses (unbalanced motors, exciters, eccentric double shafts). Suitable mounting of the drive systems ensures that the revolving unbalance is utilized only by the components in the actual direction of conveying. For example, two unbalanced masses counterrotating synchronously set up the necessary excitation force in that the flow components in the direction of the line joining the two centres of rotation cancel each other out, while those at right angles add up to give the harmonic excitation force. To avoid the unbalanced masses assuming excessive magnitude, the excitation frequency ≅ 12 to 50 Hz.

4.1. Drive with one Unbalanced Motor

This alternative (fig. 4) is used mainly on circular oscillators, which are used mostly for inclined screen constructions. If an unbalanced motor is flanged onto a screening unit, the system performs slightly elliptical motions whose shape depends on the distance between the two centres of gravity S (screen) and S_1 (unbalanced motor), and on the screen design.

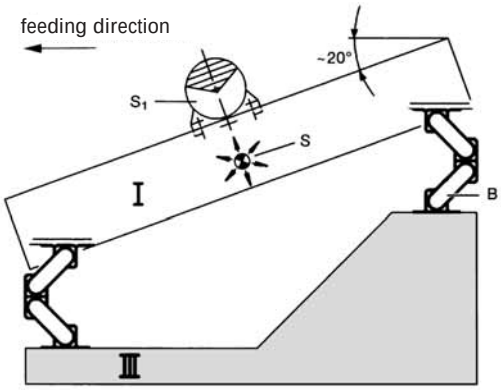

Fig. 4

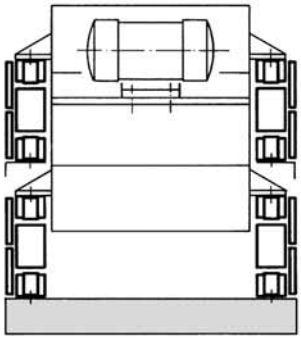

B ROSTA oscillating mountings type AB
S Centre of gravity of screen
S_1 Centre of gravity of unbalanced motor
I Screen
III Frame

4.2. Drive with one Unbalanced Motor and Pendulum Mount

Linear oscillators with unbalanced motor on a pendulum mount (fig. 5) are employed for screens and short, light conveyors.
If an unbalanced motor is flanged onto a machine through on a pendulum mount E (e. g. DK-A with bracket BK, pages 23 and 24) so that the centres of the motor and oscillating bearing and the centre of gravity of the screen lie in a straight line, then approximately linear oscillations will be generated. Through the pendulum mount the centrifugal forces are transmitted almost entirely to the screen or trough, where as the transverse forces remain ineffective. The pendulum mount drive may be used only with smaller machines.

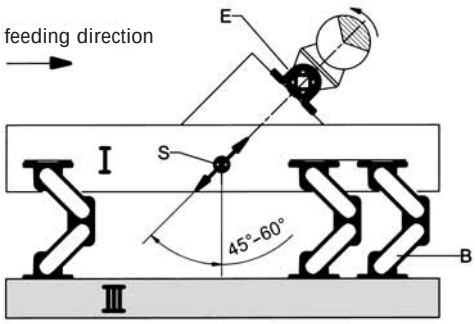

Fig. 5

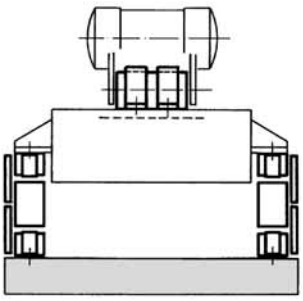

B ROSTA oscillating mountings type AB
E ROSTA rubber suspension units type DK-A with clamp BK
S Centre of gravity of screen
I Screen
III Frame

4.3. Drive with two Unbalanced Motors

If two unbalanced motors are used with a linear shaker or screen (fig. 6), it must be borne in mind that they counter-rotate and are joined absolutely rigid, so that they synchronize at once when switched on, setting-up linear oscillations.

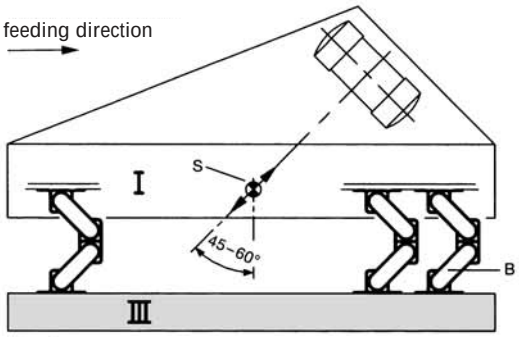

Fig. 6

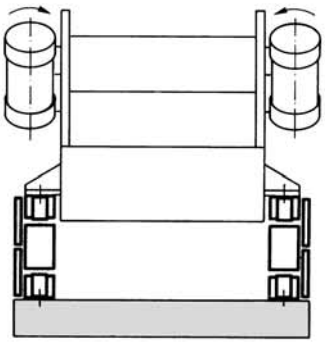

B ROSTA oscillating mountings type AB
S Centre of gravity of trough/screen
I Trough/screen
III Frame

4.4. Calculation for a Linear Oscillator with two Unbalanced Motors

The proper size of the oscillation mountings type AB or AB-D is determined as follows:
Oscillating weight (conveyor with 2 motors + proportion of material being moved) divided by number of support points (the individual points must be loaded approximately equally).
At least 4 supports, if not more, are needed for the suspension of a linear oscillator. (Very often, due to the mounting position of the unbalanced motors, lies the position of the center of gravity close by the discharge-end. The load arrangement "discharge-end : feed-end" is therefore very often 60 % : 40 % and requires at least 6 or more mounts.)
The excitation frequency may be neglected, because according to experience the amplitudes do not exceed 15 mm, so that the oscillation angles are relatively small. The natural frequency of the AB must be at least 3 times lower than its excitation frequency.

Formulas for the principal variables of a free oscillator:

Oscillating amplitude

$$sw = \frac{\text{working torque in kgcm}}{\text{total weight in kg}} \cdot 10 = \qquad \text{mm}$$

Oscillating machine factor

$$K = \frac{\left(\frac{2\pi}{60} \cdot n_{err}\right)^2 \cdot sw}{9810 \cdot 2} = [-]$$

Insulation efficiency

$$W = 100 - \frac{100}{\left(\frac{f_{err}}{f_e}\right)^2 - 1} = \%$$

Guiding values: conveying speed for linear free oscillating screens

From the intersection of the coordinates amplitude = 4 mm and motor speed n = 1460 rpm, with acceleration around 5 g the conveying speed emerges as 25 cm/sec.

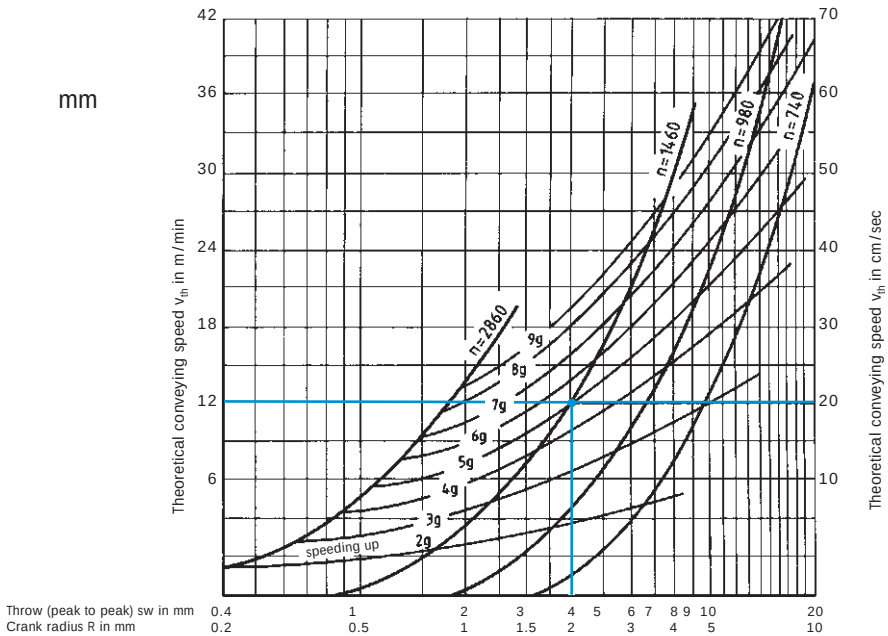

Typical Calculation

The size and number of the oscillating mountings are calculated as follows: oscillating weight (device consisting of drive units and the material conveyed) divided by the number of supports. The oscillating angle may thus be neglected. The excitation frequency must be at least 3 times higher than the natural frequency of the AB oscillating mountings to get an acceptable degree of vibration damping towards substructure.

Given:

Weight of the empty trough with drive unit	= 680 kg
Material on trough	= 200 kg
of this 20 % coupling effect	= 40 kg
Total weight of oscillating mass m	
(trough, driving unit and coupling)	= 720 kg
6 support points	

Wanted:

Loading per support $G = \frac{m \cdot g}{z} = \frac{720 \cdot 9.81}{6} = 1177.2$ N

Selected: 6 units of type AB 38

See formulas on page 53 for calculating the amplitudes, machine factors and insulation efficiency.

Installation Guidelines

The ROSTA oscillating mounts type AB, AB-HD, AB-D and HS have to be selected based on the relevant load capacity of the oscillating mass (see pages 55–59). Their mounting position is between the screen-box or feeder-trough and the substructure (frame) of the oscillating machine. The required quantity of ROSTA suspensions has to be determined according to the position of the centre of gravity of the oscillating mass (see following examples). In **linear motion** acting screens and feeders all ROSTA mounts should stay in same direction (knee of the pantograph-like mount in feeding direction). In **circular motion** acting screens the ROSTA mounts should stay mirror-inverted in a "diamond" or "rhomboid" configuration (see following examples). In order to assure an ideal material flow on the screens and feeders, it is important that the element axes of the ROSTA mounts are staying right-angled to the conveying direction, permissible tolerance ±1°, see Fig. 1, section A.

Drive Options

A. Circular Oscillator with One Unbalanced Motor

The unbalanced motor causes the device to perform elliptical oscillating movements of which the form is given by the distance between the centres of gravity of the motor and the screen device and the shape of the latter. Circular vibrating screens are mounted **(inclined)** according to the their function (see fig. 1).

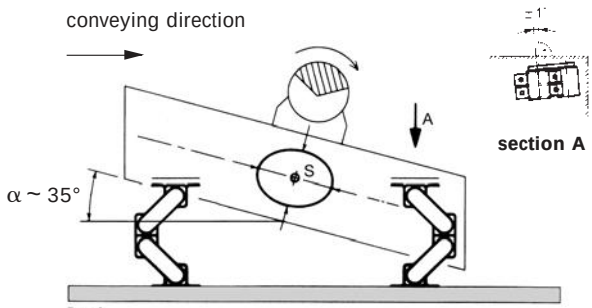

Fig. 1

B. Linear Oscillators with Two Unbalanced Motors

In case the device is supposed to perform linear oscillating movements, it is necessary to mount two unbalanced motors with rigid connection. The motors must rotate in opposite direction (to each other). The centres of gravity of the motors and the device must be on the same line, their inclination being generally 45° (see fig. 2).

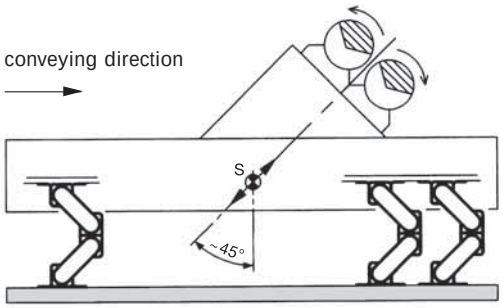

Fig. 2

C. Linear Oscillators with One Unbalanced Motor on Pendulum Mount

If the unbalanced motor is mounted on a pendulum mount, the device's oscillating movements are not exactly straight-line, but slightly elliptical. Their form depends on the distance between the centres of gravity of the motor and screen device and on the shape of the latter. Drives on pendulum mounts may be used only on smaller devices. Their inclination is usually 45° (see fig. 3).

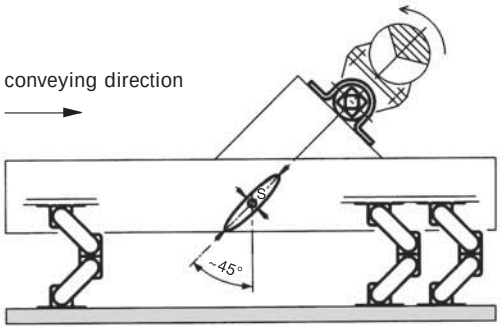

Fig. 3

OSCILLATING MOUNTING TYPE AB

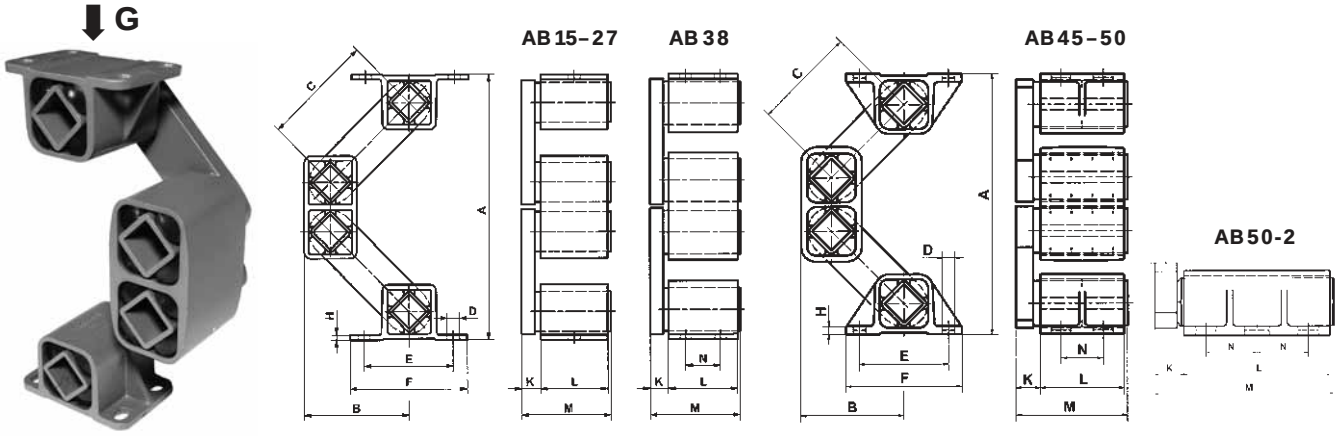

Art. No.	Type	G	A un-loaded	A max. load	B un-loaded	B max. load	C	D	E	F	H	K	L	M	N	Weight in kg
07 051 056	AB 15	50 – 160	169	124	70	89	80	Ø 7	50	65	3	10	40	52	–	0.51
07 051 057	AB 18	120 – 300	208	155	87	107	100	Ø 9	60	80	3.5	14	50	67	–	1.15
07 051 058	AB 27	250 – 800	235	175	94	114	100	Ø 11	80	105	4.5	17	60	80	–	2.20
07 051 059	AB 38	600 – 1600	305	235	120	144	125	Ø 13	100	125	6	21	80	104	40	5.10
07 051 054	AB 45	1200 – 3000	353	273	141	170	140	13x20	115	145	8	28	100	132	65	11.50
07 051 061	AB 50	2500 – 6000	380	280	150	180	150	17x27	130	170	12	35	120	160	60	20.80
07 051 055	AB 50-2	4200 – 10000	380	280	150	180	150	17x27	130	170	12	40	200	245	70	32.20

G = load capacity in N per mount

Material structure	AB 15–38	AB 45	AB 50, 50-2
Light alloy profile	X	X	
Nodular cast		X	X
Steel welded construction	X	X	
ROSTA blue painted	X	X	X

c_d	AB 15	AB 18	AB 27	AB 38	AB 45	AB 50	AB 50-2
vertical	10	18	40	60	100	190	320
horizontal	6	14	25	30	50	85	140

c_d = dynamic spring value in N/mm, in nominal load range at n_{err} = 960 min^{-1}, sw = 8 mm

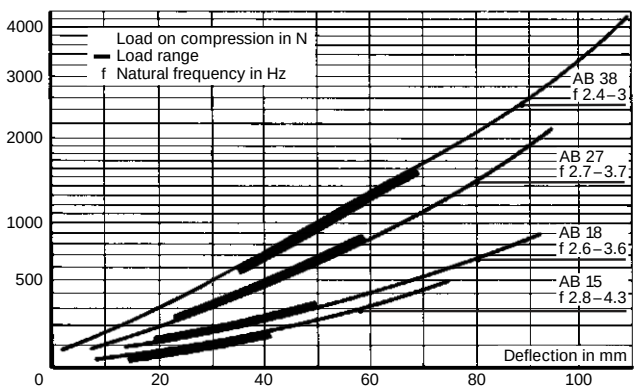

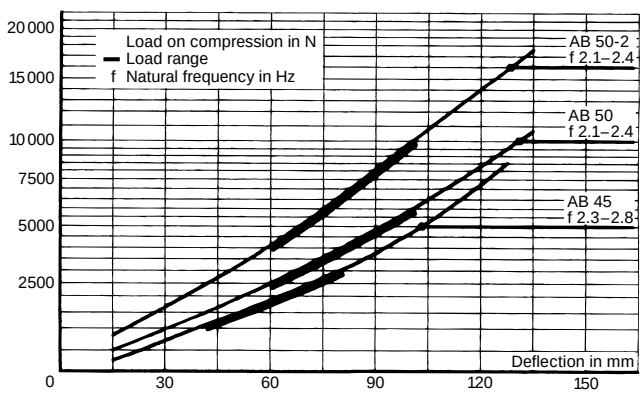

OSCILLATING MOUNTING TYPE AB TWIN

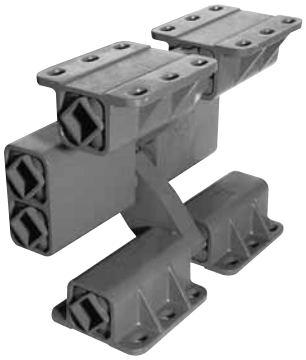

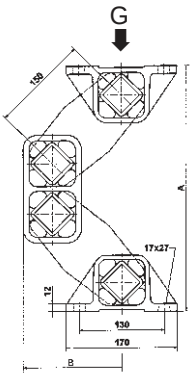

AB 50 TWIN

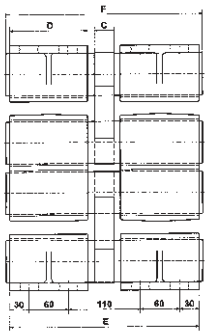

AB 50-2 TWIN

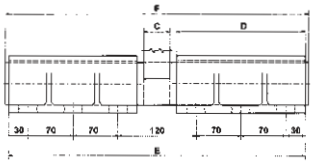

Art. No.	Type	G	A un-loaded	A max. load	B un-loaded	B max. load	C	D	E	F	Weight in kg
07 051 008	AB 50 TWIN	5000 – 12 000	380	280	150	180	30	120	290	300	35
07 051 009	AB 50-2 TWIN	8400 – 20 000	380	280	150	180	40	200	460	470	54

G = load capacity in N per mount

Material structure	AB 50, 50-2 TWIN
Nodular cast	X
Steel welded construction	X
ROSTA blue painted	X

c_d	AB 50 TWIN	AB 50-2 TWIN
vertical	380	640
horizontal	170	280

c_d = dynamic spring value in N / mm, in nominal load range at n_{err} = 960 min^{-1}, sw = 8 mm

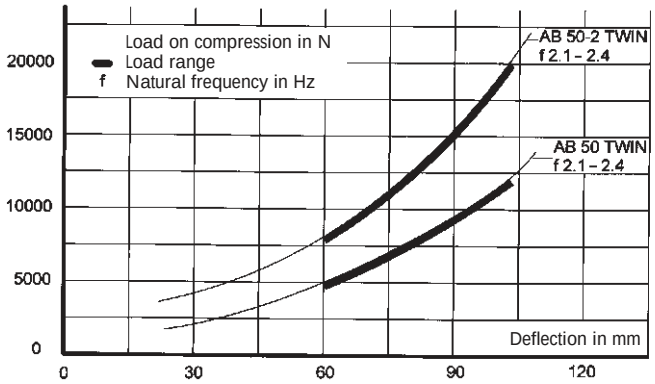

OSCILLATING MOUNTING TYPE AB-HD

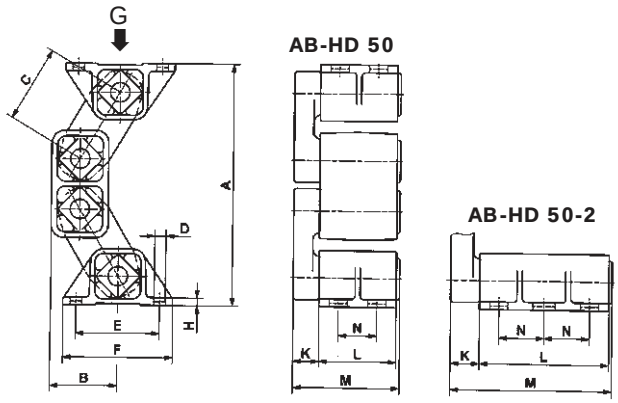

Art. No	Type	G	A un-loaded	A max. load	B un-loaded	B max. load	C	D	E	F	H	K	L	M	N	Weight in kg
07 051 062	AB-HD 50	3500 – 8400	376	311	104	141	120	17x27	130	170	12	40	120	165	60	22.7
07 051 060	AB-HD 50-2	6000 – 14000	376	311	104	141	120	17x27	130	170	12	45	200	250	70	35.5

G = load capacity in N per mount

Material structure	AB-HD 50, 50-2
Nodular cast	X
ROSTA blue painted	X

c_d	AB-HD 50	AB-HD 50-2
vertical	185	359
horizontal	143	277

c_d = dynamic spring value in N / mm, in nominal load range at n_{err} = 960 min^{-1}, sw = 8 mm

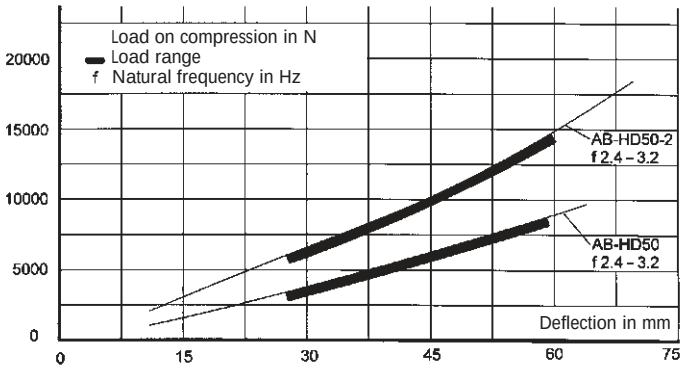

OSCILLATING MOUNTING TYPE AB-D

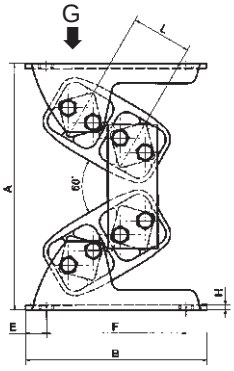

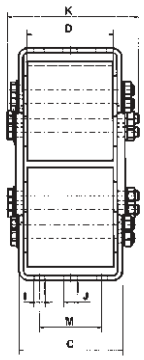

Art. No.	Type	G	A un-loaded	A* max. load	B	C	D	E	F	H	I	J	K	L	M	Weight in kg
07 281 000	AB-D 18	500 – 1200	137	117	115	61	50	12.5	90	3	9	9	74	31	30	1.3
07 281 001	AB-D 27	1000 – 2500	184	157	150	93	80	15	120	4	9	11	116	44	50	2.9
07 281 002	AB-D 38	2000 – 4000	244	209	185	118	100	17.5	150	5	11	13.5	147	60	70	7.5
07 281 003	AB-D 45	3000 – 6000	298	252	220	132	110	25	170	6	13.5	18	168	73	80	11.5
07 281 004	AB-D 50	4000 – 9000	329	278	235	142	120	25	185	6	13.5	18	166	78	90	22.0
07 281 005	AB-D 50-16	8000 – 12000	329	278	235	186	160	25	185	8	13.5	18	214	78	90	25.5
07 281 006	AB-D 50-2	11000 – 16000	329	278	235	226	200	25	185	8	13.5	18	260	78	90	29.0

G = load capacity in N per mount
* Values: setting included

Art. No.	Type	max. sw n_{err} = 740 min^{-1}	max. sw n_{err} = 980 min^{-1}	max. sw n_{err} = 1460 min^{-1}	c_d vertical	c_d at sw	c_d horizontal
07 281 000	AB-D 18	5	4	3	100	4	20
07 281 001	AB-D 27	6	5	4	160	4	35
07 281 002	AB-D 38	8	7	5	185	6	40
07 281 003	AB-D 45	10	8	6	230	8	70
07 281 004	AB-D 50	12	10	8	310	8	120
07 281 005	AB-D 50-16	12	10	8	430	8	160
07 281 006	AB-D 50-2	12	10	8	540	8	198

max. sw = max. amplitude in mm
c_d = dynamic spring value in N/mm, in nominal load range at n_{err} = 980 min^{-1} (please respect max. amplitude in mm)

Material structure	AB-D 18–45	AB-D 50–50-2
Light alloy profile	X	X
Nodular cast		X
Steel brackets, screws and nuts	X	X
ROSTA blue painted	X	X

Owing to the significantly shorter lever arm connections (in the double rubber suspension unit) the AB-D provides **a far higher loading capacity** compared with the type AB oscillating mountings with extremely compact construction. The linear cushioning produced under load, however, is sufficient to ensure the respectably low natural frequency of this oscillating mounting of approx. 3.5 Hz. At the oscillating machine frequency of approx. 16 Hz, the mounting provides an insulation efficiency of approx. 96 %.

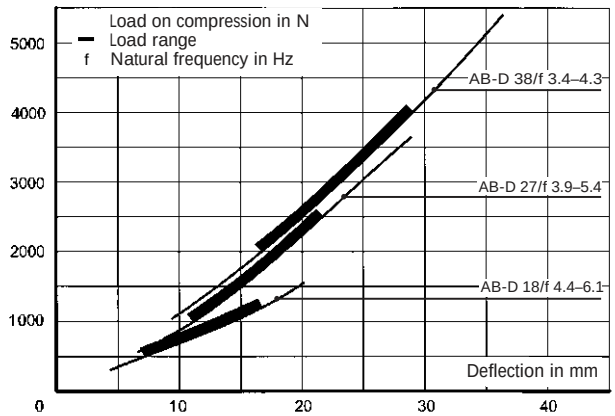

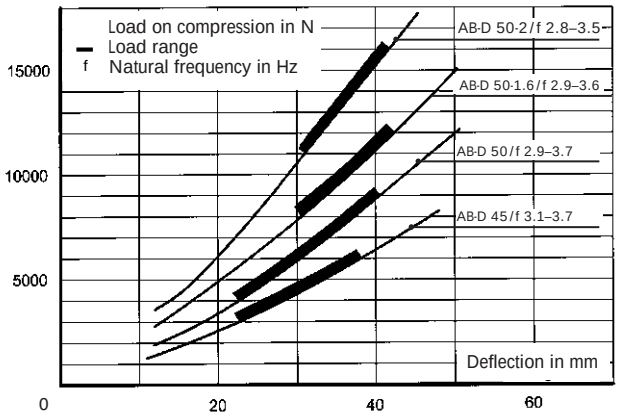

ROSTA

OSCILLATING MOUNTING TYPE HS

G

HS 27, HS 38

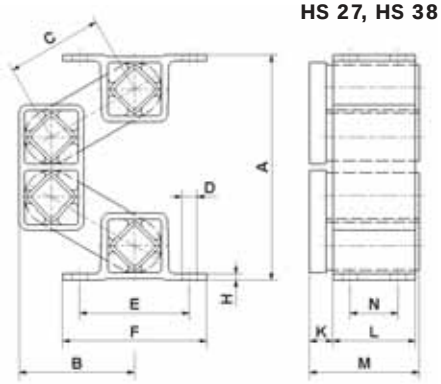

HS 45, HS 50

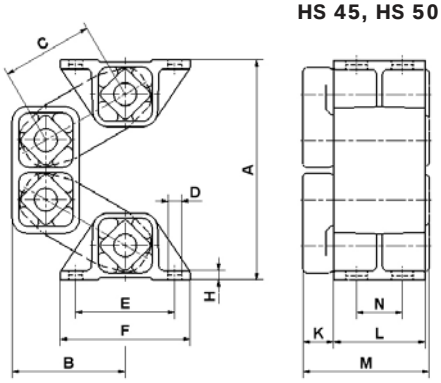

HS 50-2

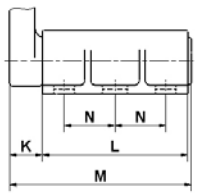

Art. No.	Type	G	A un-loaded	A* max. load	B un-loaded	B* max. load	C	D	E	F	H	K	L	M	N	Weight in kg
07 311 001	HS 27	500 – 1250	164	201	84	68	70	ø 11	80	105	4.5	17	60	80	35	1.6
07 311 002	HS 38	1200 – 2500	223	275	114	92	95	ø 13	100	125	6	21	80	104	40	4.9
07 311 003	HS 45	2000 – 4200	265	325	138	112	110	13x20	115	145	8	28	100	132	65	11.3
07 311 004	HS 50	3500 – 8400	288	358	148	118	120	17x27	130	170	12	40	120	165	60	20.2
07 311 005	HS 50-2	6000 – 14000	288	355	148	120	120	17x27	130	170	12	45	200	250	70	34.0

G = load capacity in N per mount
* Values: setting included

Material structure	HS 27, 38	HS 45	HS 50, 50-2
Light alloy profile	X	X	
Nodular cast		X	X
Steel welded construction	X	X	
ROSTA blue painted	X	X	X

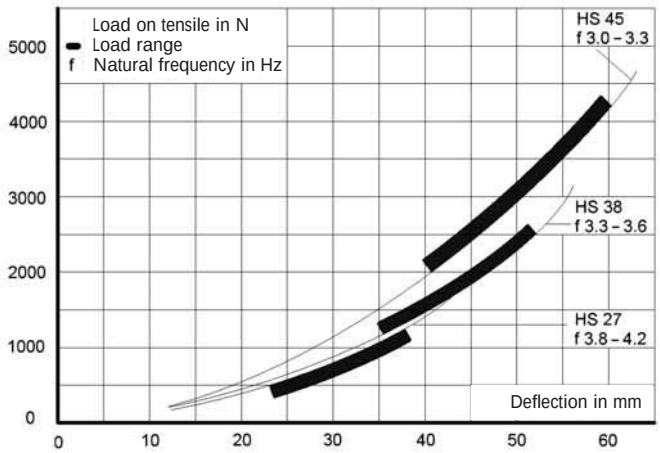

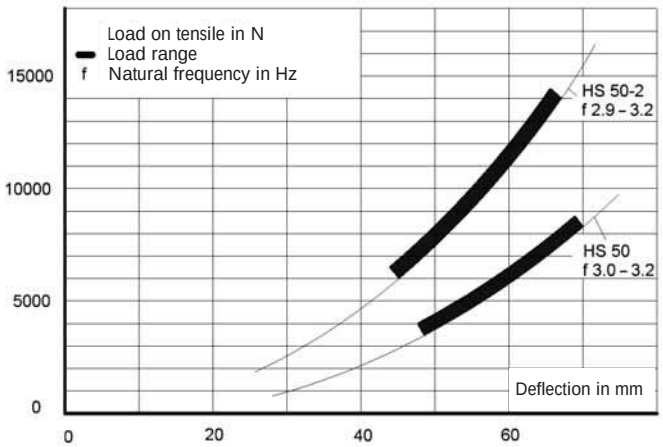

ROSTA

UNIVERSAL JOINT TYPE AK

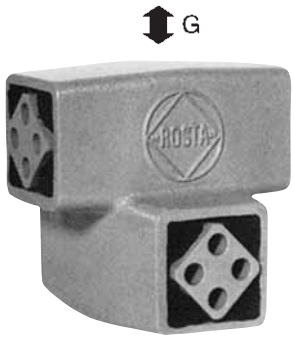

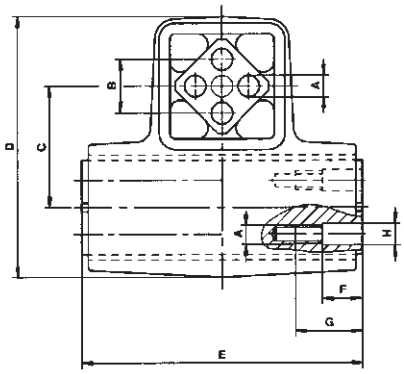

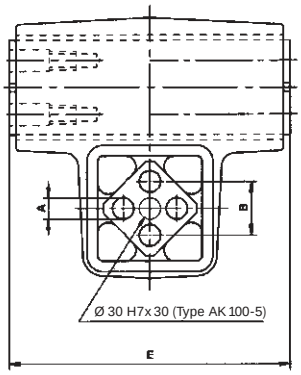

Art. No.	Type	G = max. Load in N per support	n_{err} max.* in min^{-1} at ± 5°	A	B	C	D	$E^{0}_{-0.3}$	F	G	ØH	Weight in kg
07 061 001	AK 15	160	1200	$5^{+0.5}_{0}$	$10^{\pm 0.2}$	27	54	65	–	–	–	0.40
07 061 002	AK 18	300	800	$6^{+0.5}_{0}$	$12^{\pm 0.3}$	32	64	85	–	–	–	0.60
07 061 003	AK 27	800	800	$8^{+0.5}_{0}$	$20^{\pm 0.4}$	45	97	105	–	–	–	1.90
07 061 004	AK 38	1600	800	$10^{+0.5}_{0}$	$25^{\pm 0.4}$	60	130	130	–	–	–	3.70
07 061 005	AK 45	3000	600	$12^{+0.5}_{0}$	$35^{\pm 0.5}$	72	156	160	–	–	–	6.70
07 061 011	AK 50	5600	400	M 12	$40^{\pm 0.5}$	78	172	210	40	70	12.25	11.40
07 061 012	AK 60	10000	300	M 16	45	100	218	310	50	80	16.50	37.40
07 061 013	AK 80	20000	150	M 20	60	136	283	410	50	90	20.50	85.40
07 061 009	AK 100-4	30000	100	M 24	75	170	340	410	50	100	25	124.00
07 061 010	AK 100-5	40000	100	M 24	75	170	340	510	50	100	25	148.00

* If the angle of oscillation is less than indicated, the number of revolutions can be increased; please ask our customer service.

For the fixation of the inner squares of the universal joints type AK 15 to AK 45 we suggest the use of threaded bolts passing the full element length. For the sizes AK 50 to AK 100 it is recommendable to use tension shaft screws quality **8.8.** The inner square profiles of the AK 50 to AK 100 are also having lowered thread bores, in order to allow the use of tensile shaft screws.

Material Structure

The housings of element types AK 27, 38, 45, 50, 60, 80 and 100-4 are made out of nodular cast; the other housings are made in welded steel structure. The inner squares of the sizes AK 15 to AK 50 are light alloy profiles; the squares of the types AK 60, 80 and 100 are made out of steel.

UNIVERSAL JOINT TYPE AK

Joint Support

In order to obtain a regular torsional load on all elements and a harmonic circular motion, the inner elements “E” of the universal joints must be fitted offset 90° to the one underneath. The connection between the two universal joints AK and the support ready to be installed must be adapted to the corresponding installation height, and be provided by the customer. For the fixing of the inner square sections we recommend to use hexagonal shaft screws of 8.8 quality. For the size AK 50 or bigger there are threads borings on the inner squares of the elements.

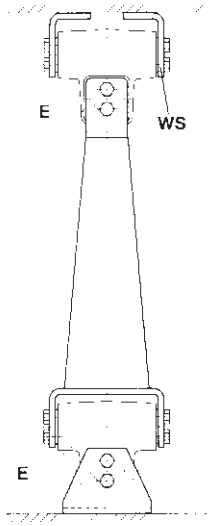

Installation Guidelines

The oscillation angle α must not exceed 10° (± 5°). Otherwise the elements “E” must be set with longer center distance (distance “X”). In order to eliminate the tilting and cardanic movements, the upper elements of the universal joint support are placed at the height close to the centre of gravity S of the screen box.

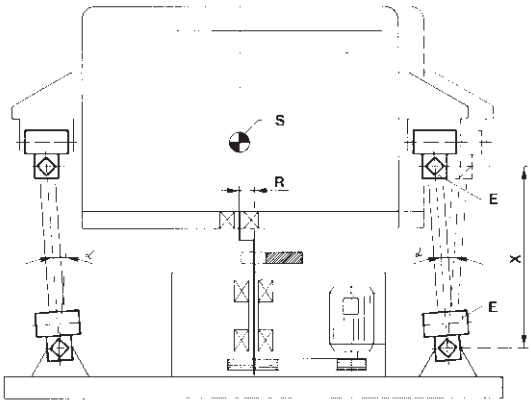

Typical Calculation (“Upright” Version)

Total oscillating mass	m	= 1600 kg
Eccentric radius	R	= 25 mm
Support height	X	= 800 mm
Oscillating angle	α	= 3.6°
Speed	n_{err}	= 230 min^{-1}
Number of universal joint supports	z	= 4 pieces

Max. dynamic load per support $G = \frac{m \cdot g \cdot 1.25^*}{z}$

$= \frac{1600 \cdot 9.81 \cdot 1.25^*}{4} = 4905$ N

Selected: 4 supports with each 2 AK 50 elements = 8 AK 50

*** = Due to the instability of the “upright” sifters, we include a security factor of 1.25 for the calculation of the AK elements.**

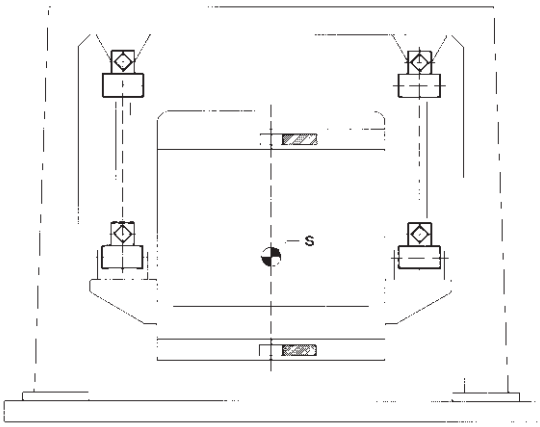

Suspended Version

We recommend our AK universal joints also for this version, which is especially used for screening tables and tumbling gyrators. Usually unbalanced motors are used to drive the screens, causing the discharge-end to oscillate freely (tumbling movements). The universal joints are under traction. However, the actual units remain the same. This version doesn’t require a security factor.

OSCILLATING MOUNTING TYPE AV

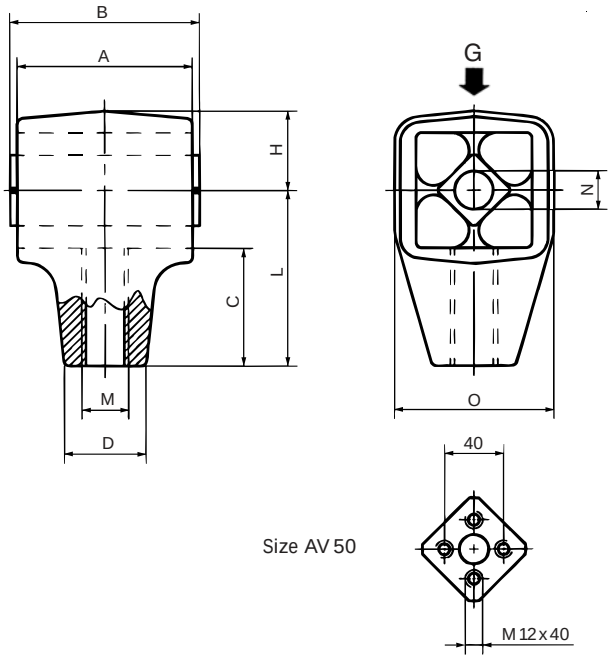

Size AV 50

Art. No.	Type	G	Dimensions in mm A	B $^{0}_{-0.3}$	C	D	H	L	M	N	O	Weight in kg
07 261 001	AV 18	600 – 1600	60	65	40.5	28	27	60	M 16	13 $^{0}_{-0.2}$	54	0.38
07 271 001	AV 18L	600 – 1600	60	65	40.5	28	27	60	M 16 L	13 $^{0}_{-0.2}$	54	0.38
07 261 002	AV 27	1300 – 3000	80	90	53	42	37	80	M 20	16 $^{+0.5}_{+0.3}$	74	0.99
07 271 002	AV 27L	1300 – 3000	80	90	53	42	37	80	M 20 L	16 $^{+0.5}_{+0.3}$	74	0.99
07 261 003	AV 38	2600 – 5000	100	110	67	48	44	100	M 24	20 $^{+0.5}_{+0.2}$	89	1.74
07 271 003	AV 38L	2600 – 5000	100	110	67	48	44	100	M 24 L	20 $^{+0.5}_{+0.2}$	89	1.74
07 261 004	AV 40	4500 – 7500	120	130	69.5	60	48	105	M 36	20 $^{+0.5}_{+0.2}$	93	4.50
07 271 004	AV 40L	4500 – 7500	120	130	69.5	60	48	105	M 36 L	20 $^{+0.5}_{+0.2}$	93	4.50
07 261 005	AV 50	6000 – 16000	200	210	85	80	60	130	M 42	–	116	12.29
07 271 005	AV 50L	6000 – 16000	200	210	85	80	60	130	M 42 L	–	116	12.29

G = max. load capacity in N per mount or rocker arm

Material Structure

The housings are made out of light metal die cast, housing of type AV 40 and AV 50 in nodular cast. Inner squares are light alloy profiles, except size AV 40 is made out of steel.

Typical Calculation

Given:

Total weight of oscillating mass m = 800 kg

Circular oscillating, amplitude sw = 40 mm
(peak to peak)

Wanted:
Element size, configuration and center distance A

Load per arm $G = \frac{m \cdot g}{z} = \frac{800 \cdot 9.81}{4} = 1962\ N$

Selected: 8 pcs. AV 27 (4 arms consisting of 2 AV 27, crosswise installed for purely circular motion). Eventually with right- and left-hand threads.

Permissible center distance A by max. oscillation angle of 2°
and radius = 20 mm:

$A = \frac{20}{tg\,2°} = \frac{20}{0.0349} = \underline{572.72\ mm}$

Selected: Center distance = 600 mm

ROSTA

OSCILLATING MOUNTING TYPE AV

Installation:

Fig. I

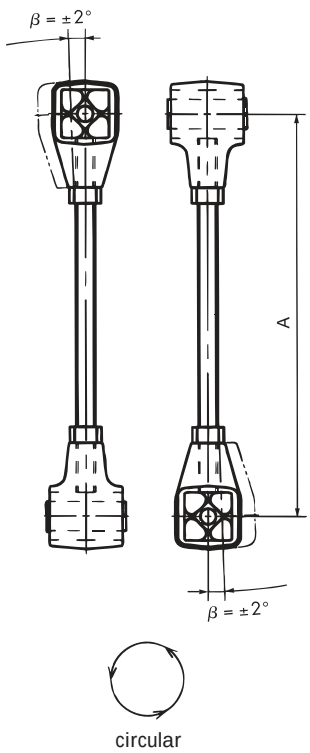

Fig. II

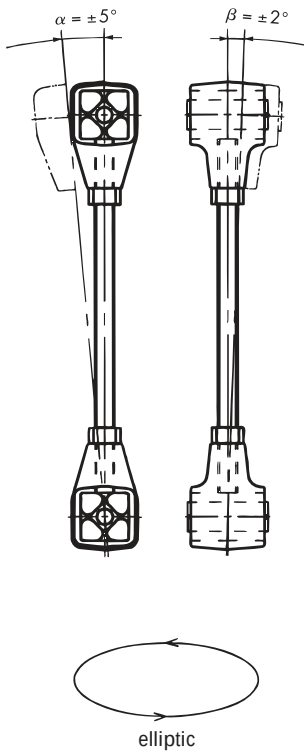

Fig. I: Element configuration “crosswise” (element axis offset 90°) for guiding *circular motions* of gyratory sifters.
Max. angle $\beta = \pm 2°$

Fig. II: Element configuration “parallel” (e.g. for support of Rotex-type screens) for guiding *elliptic motions.*
Max. angle $\alpha = \pm 5°$
Max. angle $\beta = \pm 2°$

The connection rod with nuts and spring washers has to be supplied by the customer.

Installation

The length of the connection rod and the resulting centrifugal force determine the radius of the circular motion of the hanging gyratory screen or sifter. The rocker on the sifter should be fixed close to the centre of gravity (S) or slightly below the centre of gravity of the oscillating machine part (see sketch).
The standardised right- or left-hand threads of the AV elements allow a very easy adjustment of the four rocker arms (L) and thus of the length (A).
Use central screws (M12, M16, M20, and M24) to connect the rocker arm and the ceiling structure for elements sizes AB 18, 27, 38 and 45. For the AV 50 size use four M12 screws on both ends.

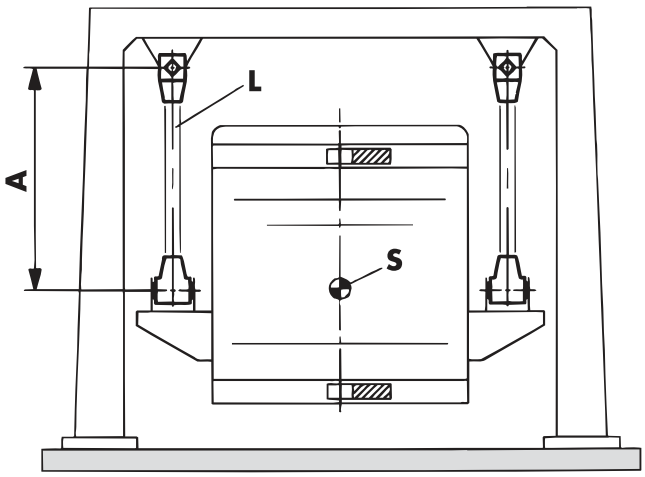

APPLICATIONS

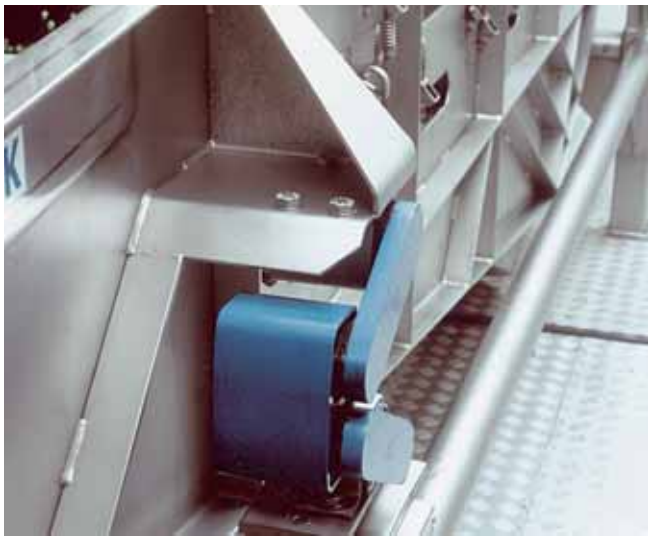

AB suspension of a vegetable feeder

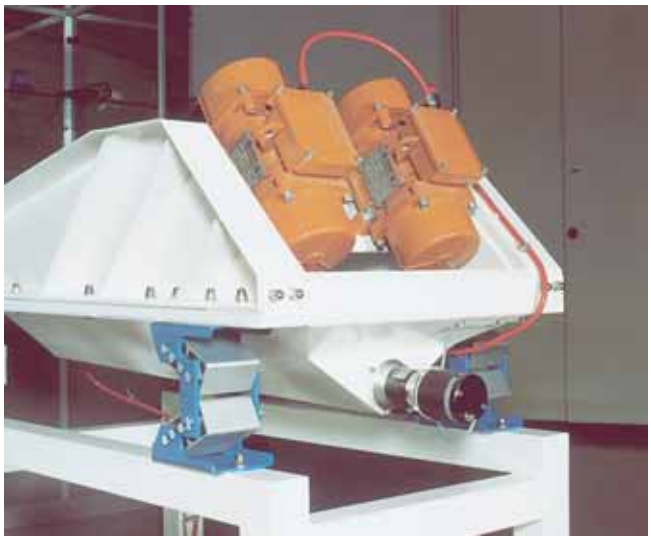

AB-D suspension of a rice screen

AB suspension of a circular gravel screen

Hanging silo-discharge-feeder on AB

Stainless steel AB's supporting salad feeder

AB-D suspension of a dewatering screen

ROSTA