INDUSTRIAL VIBRATORS

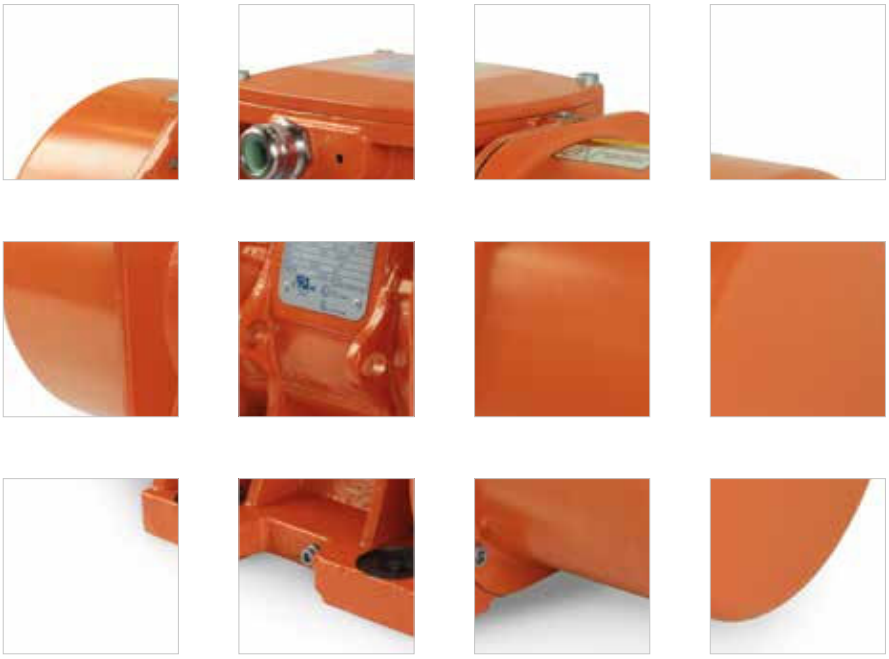

THE WORLDWIDE LEADER IN VIBRATION TECHNOLOGY

OLI®

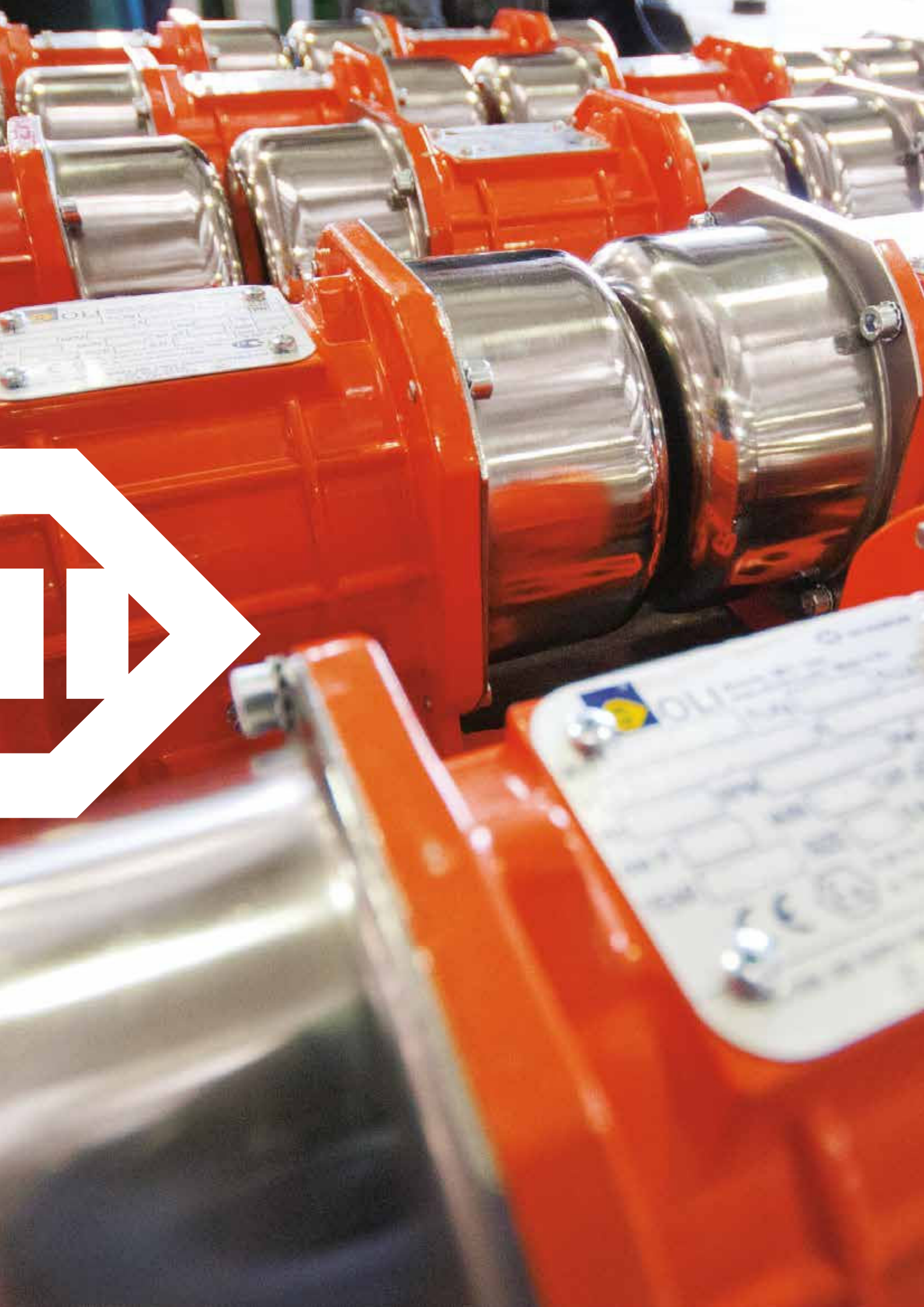

Intro

Company profile 4
Technical features 6
Standard specifications 7
The OLI vibrator range 8
Certifications 9
How to choose a motovibrator 10

MVE Standard range

2 poles 12
4 poles 14
6 poles 16
8 poles 18
2 poles single phase 20
MICRO 22
MVE DC Direct Current 24

MVE Increased safety

2 poles 26
4 poles 28
6 poles 30
8 poles 32

MVE Explosion-proof

2 and 4 poles 34
6 and 8 poles 36

MVE Hi-stroke milling

8 and 10 poles 38

Installation

Mounting 40
How to change vibration intensity 42

Technical drawings

Drawings extra page

Worldwide leader in vibration technology

OLI is **the world's top selling manufacturer of Electric and Pneumatic Vibrators**.
A high level of customer service is guaranteed through 18 OLI Trading Subsidiaries, 36+ local warehouses and 3 manufacturing plants worldwide.

OUR 3 DIVISIONS

PROVIDE CUSTOMERS WITH OPTIMAL SOLUTIONS FOR ALL REQUIREMENTS

INDUSTRIAL VIBRATORS	FLOW AIDS	CONCRETE CONSOLIDATION
Electric motovibrators for vibrating equipments	Comprehensive range of electric and pneumatic vibrators to solve any problem of flowability	Internal concrete vibrators and converters for reliable and efficient concrete compaction

Originally specialising in immersion vibrators for concrete consolidation, OLI is now the worldwide leader in vibration technology, with a **complete range of electric and pneumatic internal and external vibrators**.

By supplying **competitive, high quality products for wide-ranging applications,** OLI combines **performance** and **reliability** by adapting to the ever-changing market. A strong believer in innovation, OLI is constantly striving to be ahead of the opposition.

As a global player in industrial vibration technology, the key focus of OLI's business strategy is **rapid stock delivery, any time, anywhere in the world**.

Excellent customer service is of pivotal importance: the company guarantees **quick order processing** and customers worldwide can enjoy access to the same high quality product and services.

OLI has access to credible expertise when it comes to finding suitable solutions to customers' requests. A team of engineers specialised in designing efficient, reliable and safe solutions backed by a **globally certified management**.

OLI provide their customers with state-of-the-art equipment and the blueprint for the next generation of products is already in progress.

TECHNICAL FEATURES

QUALITY

World class materials
Class F insulation
Durable sealing
Premium bearings
Strong body design - FEM designed
Vacuum insulation
FMEA analysis
3D quality check

EFFICIENCY

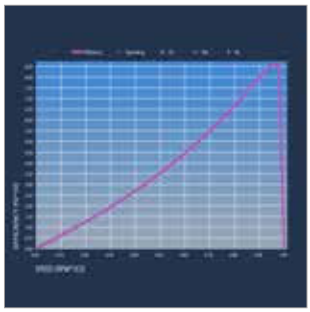

Optimised power/weight ratio
S1 continuous duty service
Optimized electric design

RELIABILITY

PTC thermistor 130 °C
Specific grease retaining device
Tropicalised standard
IP66 protection
Class F insulation

FLEXIBILITY

Easy mass adjustment
Various voltages and frequencies available
Easy access to the terminal box
Multiple eye-bolts

Standard specifications

	RANGE			
Specification	Standard	Increased Safety	Explosion-Proof	Hi-stroke Milling
Power supply	Three-phase from 12V to 690V. 50Hz or 60Hz; Single phase 110V 60Hz and 220V 50Hz. Three-phase motors are designed for inverter application	Three-phase from 230V to 460V. 50Hz or 60Hz	Three-phase from 230V to 690V. 50Hz or 60Hz. All motors are designed for inverter application from 20Hz to base frequency	
Time rating	Continuous duty (S1)			
Protection structure	Mechanical protection IP66 according to IEC 60529			
Bearings	Ball bearings from size MICRO to 50. Roller bearings from size 60 to 110	Ball bearings from size 10 to 50. Roller bearings from size 60 to 90	Roller bearings	
Coating colour	Polyester powder coating. Standard colour RAL 2009. Special corrosion resistant painting available on request on Standard range only			
Footprint	Compatibility with the main competitor's footprint on request			
Installation and operating environment	For indoor and outdoor use			
	Ambient temperature: -20 °C to +40 °C. Up to +55 °C available on request	Ambient temperature: -20 °C to +40 °C	Ambient temperature: -20 °C to +40 °C. Up to +55 °C available on request	Ambient temperature: -20 °C to +40 °C
Standards supported	Conformity with European Directive Low voltage 2014/35/UE Machine directive 2006/42/EC ATEX 2014/34/UE			
Mass covers	Aluminium for motors from size 10 to size 50 and size 100, 105, 110. Mild steel for size 60 to size 91. Stainless steel AISI 304 for direct current motovibrators	Aluminium for motors from size 10 to size 50. Mild Steel for size 60 to size 91	AISI 304 Stainless Steel	Steel
Windings	2. 4. 6 and 8 poles three-phase asynchronous motor from size 10 to 110; 2 poles single phase from size 10 to 30	2. 4. 6 and 8 poles three-phase asynchronous motor		8 and 10 poles three-phase asynchronous motor
	Class F insulating materials (155 °C). Vacuum impregnated windings; PTC thermistor 130 °C standard from size 60			
Flanges	Grey cast iron up to size 80. Ductile cast iron from size 100			
Frame	Aluminium up to size 50. Ductile cast iron from size 60			
Shaft	Steel alloy highly resistant			
Eccentric masses	Completely adjustable			

The OLI Vibrator Range

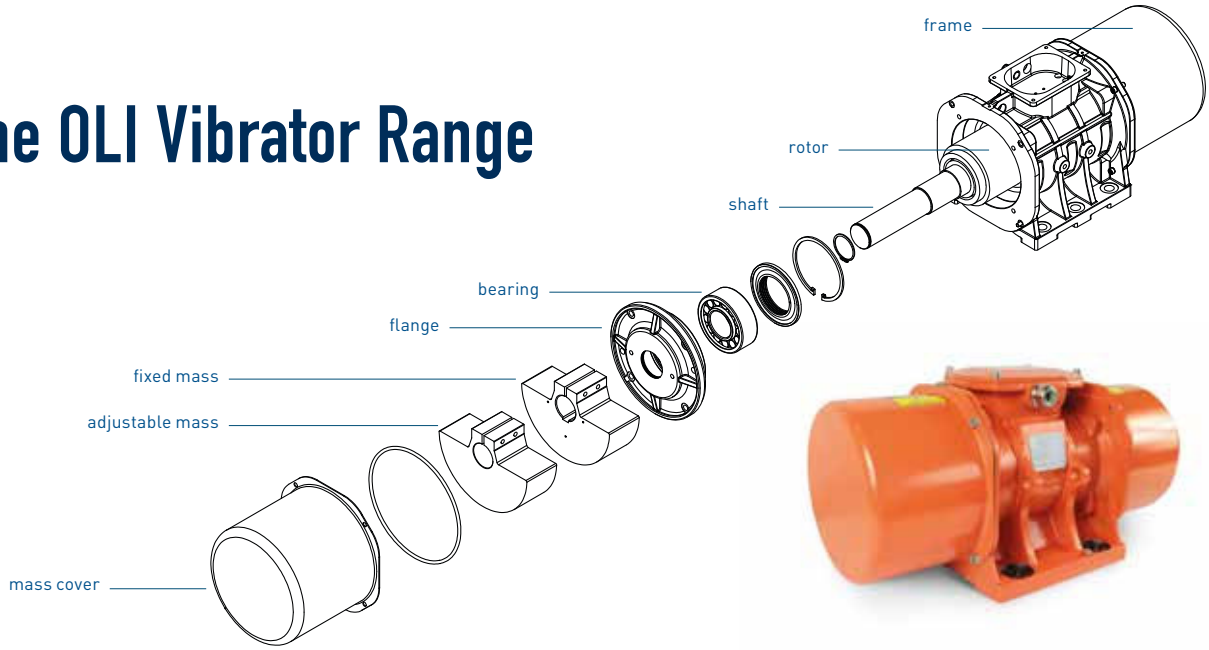

Providing centrifugal force up to 26,000 kgs and with multiple voltage options OLI's range of electric motovibrators covers several fields of application in every country as well as many different industrial sectors: from food to mining, from foundry to recycling and more.
OLI's electric motovibrators are designed and manufactured using the latest technologies and premium quality materials and components.
Motor bodies, bearing flanges and shafts are FMEA designed and manufactured using first grade Aluminium alloy, cast iron and steel alloy to withstand heavy duty applications and guarantee safe operation in any condition.
Vacuum impregnated windings and class F insulating materials enhance reliability and durability.
Top quality bearings and an efficient grease retaining system assure long lasting performance and low noise generation.
Adjustable eccentric masses allow easy fine tuning of the Max centrifugal force provided by the motor.
Several certifications for use in hazardous environments are available in the OLI range to match the most demanding specification worldwide.

ATEX ZONES

- ACCIDENTAL RISK
- OCCASIONAL RISK
- CONSTANT RISK

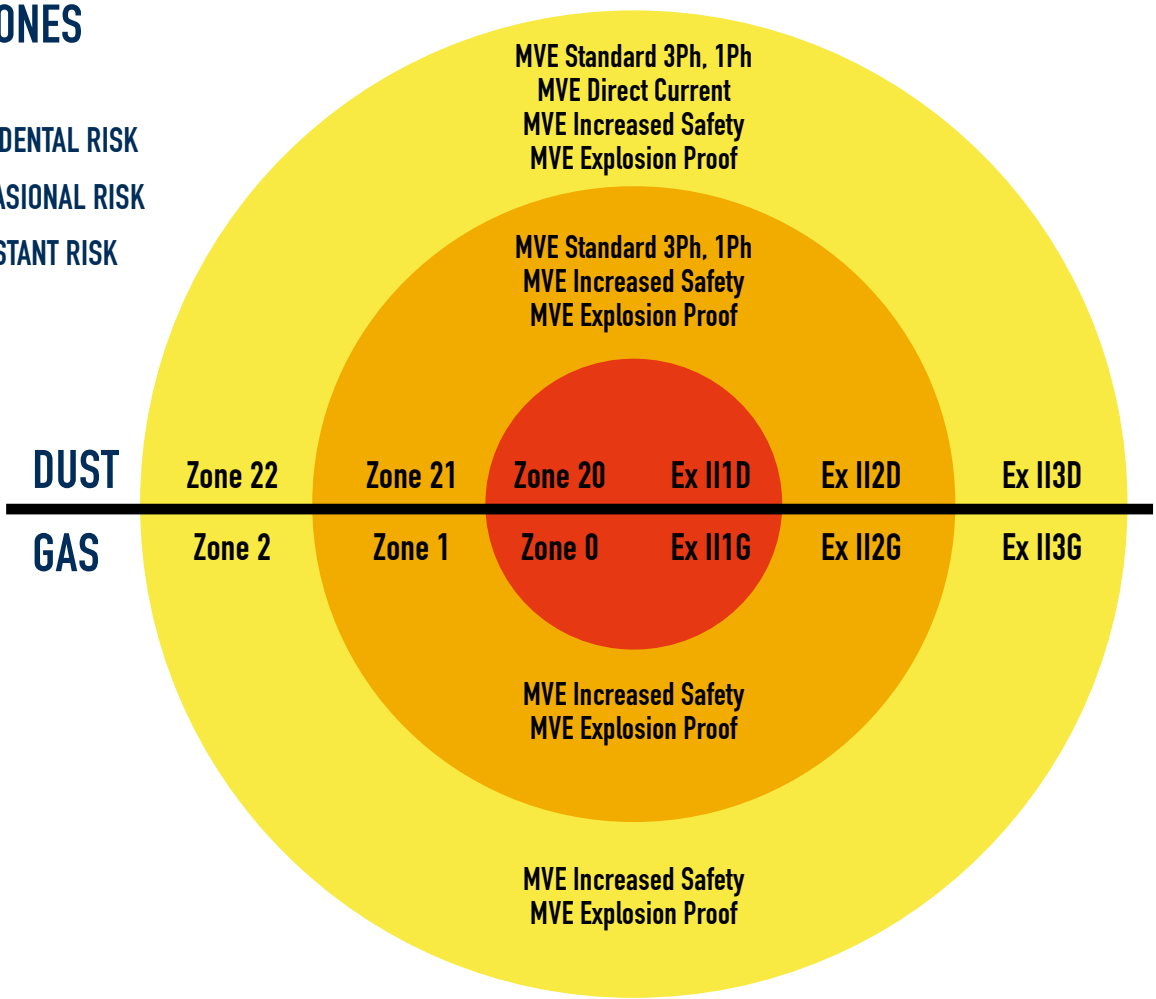

Certifications

Standard range

SIZE 10-91 | SIZE 100, 105, 110 | MICRO | 1-PH

Conformity with European Directive - Low voltage 2014/35/UE
Machine Directive 2006/42/EC; ATEX 2014/34/UE - UL 1836. UL 1004-1 - SAC22.2 NO 25. 100. 145

CATEGORY	CERTIFICATIONS	INTERNATIONAL STANDARD	GAS	DUST
ATEX zone 21 Class II Div.2 Temperature range -20/+40 °C *		EN 60079-0, EN 60079-31	n/a	II2D Ex tb IIIC Tx Db IP66
		IEC 60079-0, IEC 60079-31	n/a	Ex tb IIIC Tx Db IP66
	Intertek	UL 1004-1, UL 60079-0, UL 60079-31 CSA 22.2 100, CSA 22.2 60079-0, CSA 22.2 60079-31	n/a	Class II Div.2 Groups F, G T4

* Extended temperature range up to 55 °C available on request.

MVE DC Range: II 3D Ex tc IIIc T100 IP66

Tx = T100 °C up to size 30 included;
Tx= T135 °C from size 40 up.

Increased safety range

SIZE 20-91

Conformity with European Directive - Low voltage 2014/35/UE
Machine Directive 2006/42/EC - ATEX 2014/34/UE

CATEGORY	CERTIFICATIONS	INTERNATIONAL STANDARD	GAS	DUST
ATEX zone 1-21 Class II Div.2 (dust) Class I Div.2 (gas) Temperature range -20/+40 °C		EN 60079-0, EN 60079-7	II 2G Ex eb IIC T3 Gb	II2D Ex tb IIIC Tx Db IP66
		IEC 60079-0, IEC 60079-7	Ex eb IIC T3 Gb	Ex tb IIIC Tx Db IP66
	Intertek	UL 1004-1, UL 60079-0, UL 60079-7 CSA 22.2 100, CSA 22.2 60079-0, CSA 22.2 60079-7	Class I Div.2 Group A, B, C, D T3	Class II Div.2 Groups F, G T4

Tx = T100 °C up to size 30 included;
Tx= T135 °C from size 40 up.

Explosion proof range

SIZE 50-80

Conformity with European Directive - Low voltage 2006/95/EC - EMC 2004/108/EC
Machine Directive 2006/42/EC - ATEX 94/9/EC - UL 1836. UL 1004-1. UL 674 - CSAC22.2 NO 25. 100. 145

CATEGORY	CERTIFICATIONS	INTERNATIONAL STANDARD	GAS	DUST
ATEX zone 1-21 Class II Div.2		EN 60079-0, EN 60079-31, EN 60079-1	ATEX II2G Ex db IIB T3	n/a
		IEC 60079-0, IEC 60079-31, IEC 60079-1	IECEx Ex db IIB T3	n/a
		UL 1004-1, UL 674 CSA 22.2 100, CSA 22.2 60079-1, CSA 22.2 60079-0, CSA 22.2 60079-31	CLASS I Div.1 Group C, D T3 IP66	n/a

How to choose a motovibrator

1.

Choose rpm and the amplitude "e" (0 - peak) suitable for your application:

Circular vibration

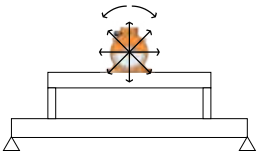

Linear vibration

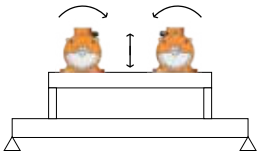

Application processes	Vibration		Revolutions Per Minute					
			50Hz	750	1000	1500	3000	6000
	Circular	Linear	60Hz	900	1200	1800	3600	-
Conveying		✓			✓	✓		
Separation / Screening / Sizing		✓		✓	✓	✓		
Positioning / Feeding		✓		✓	✓	✓		
Filter cleaning	✓						✓	
Silo/hopper emptying	✓						✓	
Fluid beds		✓		✓	✓			
Bin activators	✓					✓	✓	
Compacting		✓					✓	✓
Concrete consolidation	✓						✓	✓

rpm	e (mm)	
	Min.	Max.
3,600	0.3	0.6
3,000	0.3	0.8
1,800	1.2	2.2
1,500	1.4	2.6
1,200	2.5	4.0
1,000	3.0	5.2
900	3.5	5.5
750	3.5	6.0

2.

Choose an MVE from the tables of the following pages and use its Wm into this formula:

$$e = 5 \times \frac{n \times Wm}{n \times M_{mot} + M_{vm}}$$

e = amplitude of vibration 0-peak (mm)

n = number of vibrating motors

Wm = working moment (kgcm)

M_{mot} = motor weight (kg)

M_{vm} = vibrating machine weight (without material and motors)

3.

Check the obtained value "e":

- If it is similar to the required one (step 1) ➡ the MVE model is correct.
- If it is not similar to the required one (step 1) ➡ repeat the process (step 2) with a different MVE model.

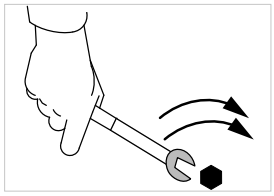

For tips on installation see section page 40

Important

Several voltages are available to match local electric specifications worldwide both at 50Hz and 60Hz.

All OLI motors can be operated with double voltage by simply changing the connections inside the terminal box from Star to Delta or vice-versa.

Three-phase MVEs with double rated voltage:

⅄ (Star) High Voltage - Factory preset

Δ (Delta) Low Voltage

MVEs with "(Delta)":

Δ (Delta) Low Voltage - Factory preset

⅄ (Star) High Voltage

For details about "Star" and "Delta" connections see page 41.

VOLTAGE Delta / Star	Frequency (Hz)	Country
200-230 / 345-400	50 / 60	Japan and Saudi Arabia
220-240 / 380-415	50	Europe and most of Asian Countries
230 / 460 *	60	USA
330 / 575 *	60	Canada
220-277 / 380-480	60	Brazil
290-300 / 500-525	50	South Africa
500-525 (Delta)	50	South Africa
380-480 (Delta)	60	Brazil
575 (Delta) *	60	Canada
380-415 / 660-720 (Delta)	50	Europe and most of Asian Countries
460 (Delta) *	60	USA
115 (Single-phase)	60	USA and Canada
115 (Single-phase)	50	Variuous
220 (Single-phase)	60	Brazil
230 (Single-phase)	50	Europe and most of Asian Countries

*** Voltage Tolerance: ± 10%**

MVE STANDARD RANGE

2 POLES – 3000/3600 rpm

Wm (kgcm)		Model		Centrifugal Force (kg)		Weight (kg)		ELECTRICAL SPECIFICATIONS							CERTIFICATE	
								Input Power (kW)		Nominal Current **A max. (Y)**		Ia/In		Cable Gland	Class II Div.2	II 2D
50Hz	60Hz	50Hz	60Hz	50Hz	60Hz	50Hz	60Hz	50Hz	60Hz	50Hz (400V)	60Hz (460V)	50Hz	60Hz	Metric	Temp. Class	Temp. Class
1.3	1.0	MVE 60/3E-10A0	MVE 60/36E-10A0	66	71	4		0.09	0.09	0.25	0.23	3.2	3.2	M16	T4	100 °C
2.0	1.3	MVE 100/3E-10A0	MVE 100/36E-10A0	98	95	5		0.09	0.09	0.25	0.23	3.2	3.2	M16	T4	100 °C
3.7	2.6	MVE 200/3E-20A0	MVE 200/36E-20A0	187	189	7		0.15	0.18	0.35	0.30	3.5	3.5	M20	T4	100 °C
3.7	2.6	MVE 200/3E-23A0	MVE 200/36E-23A0	187	189	7		0.15	0.18	0.35	0.30	3.5	3.5	M20	T4	100 °C
6.4	4.5	MVE 300/3E-30A0	MVE 300/36E-30A0	321	323	10		0.25	0.28	0.52	0.45	3.8	3.7	M20	T4	100 °C
8.0	5.7	MVE 400/3E-30A0	MVE 400/36E-30A0	407	411	10		0.27	0.33	0.58	0.60	3.7	3.7	M20	T4	100 °C
10.3	7.4	MVE 500/3E-40A0	MVE 500/36E-40A0	530	534	16		0.50	0.58	0.96	0.97	4.2	4.4	M20	T4	135 °C
14.9	10.6	MVE 700/3E-40A0	MVE 700/36E-40A0	758	765	17		0.59	0.61	1.25	1.24	4.5	5.2	M20	T4	135 °C
15.7	11.1	MVE 800/3E-50A0	MVE 800/36E-50A0	794	800	20		0.70	0.84	1.45	1.50	4.0	4.0	M20	T4	135 °C
20.3	14.0	MVE 1200/3E-50A0	MVE 1200/36E-50A0	1,005	1,013	21		0.95	1.15	1.85	1.95	4.6	4.7	M20	T4	135 °C
26.6	18.6	MVE 1300/3E-50A0	MVE 1300/36E-50A0	1,355	1,365	22		1.30	1.38	2.44	2.25	5.4	5.2	M20	T4	135 °C
26.6	18.6	MVE 1300/3E-51A0	MVE 1300/36E-51A0	1,355	1,365	22		1.30	1.38	2.44	2.25	5.4	5.2	M20	T4	135 °C
31.3	22.2	MVE 1600/3E-60A0	MVE 1600/36E-60A0	1,601	1,608	51	50	1.54	1.60	2.94	2.61	6.1	6.4	M25	T4	135 °C
36.8	27.6	MVE 2000/3E-60A0	MVE 2000/36E-60A0	2,027	1,997	52	50	2.10	2.10	3.75	3.42	6.7	6.6	M25	T4	135 °C
46.0	31.9	MVE 2300/3E-60A0	MVE 2300/36E-60A0	2,302	2,306	53	51	2.40	2.45	4.44	3.45	6.2	6.5	M25	T4	135 °C
68.1	43.9	MVE 3200/3E-75A1	MVE 3200/36E-75A1	3,252	3,176	103	101	2.76	2.90	5.30	4.61	8.5	8.4	M32	T4	135 °C
79.4	56.0	MVE 4000/3E-75A1	MVE 4000/36E-75A1	4,033	4,052	107	104	2.90	2.90	5.30	4.61	8.7	9.9	M32	T4	135 °C
103.2	69.8	MVE 5000/3E-75A1	MVE 5000/36E-75A1	5,009	5,048	111	106	4.00	4.00	7.22	6.28	8.7	10.0	M32	T4	135 °C
										A max. (Δ)						
129.6	90.5	MVE 6500/3E-85A0	MVE 6500/36E-85A0	6,510	6,552	228	230	5.23	5.50	9.43	8.20	8.7	9.0	M32	T4	135 °C
179.6	129.6	MVE 9000/3E-85A0	MVE 9000/36E-85A0	9,025	9,375	240	235	9.50	9.30	17.80	14.40	8.6	8.8	M32	T4	135 °C
129.6	90.5	MVE 6500/3E-86A0	MVE 6500/36E-86A0	6,510	6,552	228	230	5.50	6.30	9.50	9.50	8.2	7.7	M32	T4	135 °C
179.6	129.6	MVE 9000/3E-86A0	MVE 9000/36E-86A0	9,025	9,375	240	235	6.60	7.70	11.50	11.50	8.2	8.2	M32	T4	135 °C

UP TO SIZE 60 (NOT INCLUDED)
60Hz masses = 50Hz masses adjusted at 70%

ABOVE SIZE 60 (INCLUDED)
Specific masses for 60Hz

To convert kg into Newton: N = 9.81 · kg

- II2D Ex tb IIIC Tx Db IP66
- Equipment and protective system intended for use in potentially explosive atmospheres (Zone 21) - Directive 2014/34/UE
- Compliance with Essential Health and Safety Requirements
- IEC 60034-1, IEC EN 60079-0, IEC EN 60079-31

DIMENSIONAL SPECIFICATIONS (mm)

Model 50Hz	Model 60Hz	Drawing	Size	C 50Hz	C 60Hz	M) 50Hz	M) 60Hz	A	B	Ø G	Holes n°	D	E	F	H	I	L	N
MVE 60/3E-10A0	MVE 60/36E-10A0	A1	10A0	213		45		Multiple Footprint			4	130	135	11	50	96	107	85
								62-74	106	9								
								33	83-102	7								
MVE 100/3E-10A0	MVE 100/36E-10A0	A1	10A0	213		45		Multiple Footprint			4	130	135	11	50	96	107	85
								62-74	106	9								
								33	83-102	7								
MVE 200/3E-20A0	MVE 200/36E-20A0	B1	20A0	233		54		62-74	106	9	4	130	154	15	65	125	120	112
MVE 200/3E-23A0	MVE 200/36E-23A0	G	23A0	222		55		Multiple Footprint			4	164	140	25	82	116	159	110
								62-74	106	9								
								65	140	13								
								115	135	11								
								135	115	11								
MVE 300/3E-30A0	MVE 300/36E-30A0	C1	30A0	254		42		Multiple Footprint			4	150	173	15	79	150	166	134
								80	110	11								
								90	125	13								
								124	110	11								
								135	115	11								
MVE 400/3E-30A0	MVE 400/36E-30A0	C1	30A0	274		52		Multiple Footprint			4	150	173	15	79	150	166	134
								80	110	11								
								90	125	13								
								124	110	11								
								135	115	11								
MVE 500/3E-40A0	MVE 500/36E-40A0	D1	40A0	330		78		105	140	13	4	170	196	20	92	169	166	158
MVE 700/3E-40A0	MVE 700/36E-40A0	D1	40A0	330		78		105	140	13	4	170	196	20	92	169	166	158
MVE 800/3E-50A0	MVE 800/36E-50A0	D1	50A0	321		62		120	170	17	4	208	210	22	96	185	192	170
MVE 1200/3E-50A0	MVE 1200/36E-50A0	D1	50A0	321		62		120	170	17	4	208	210	22	96	185	192	170
MVE 1300/3E-50A0	MVE 1300/36E-50A0	D1	50A0	321		62		120	170	17	4	208	210	22	96	185	192	170
MVE 1300/3E-51A0	MVE 1300/36E-51A0	D1	51A0	310		55		120	170	17	4	208	220	25	105	203	192	187
MVE 1600/3E-60A0	MVE 1600/36E-60A0	D1	60A0	402		90		140	190	17	4	230	260	26	124	240	218	222
MVE 2000/3E-60A0	MVE 2000/36E-60A0	D1	60A0	402		90		140	190	17	4	230	260	26	124	240	218	222
MVE 2300/3E-60A0	MVE 2300/36E-60A0	D1	60A0	402		90		140	190	17	4	230	260	26	124	240	218	222
MVE 3200/3E-75A1	MVE 3200/36E-75A1	D1	75A1	516		117		155	255	25	4	304	314	30	147	285	277	265
MVE 4000/3E-75A1	MVE 4000/36E-75A1	D1	75A1	516		117		155	255	25	4	304	314	30	147	285	277	265
MVE 5000/3E-75A1	MVE 5000/36E-75A1	D1	75A1	564	516	141	117	155	255	25	4	304	314	30	147	285	277	265
MVE 6500/3E-85A0	MVE 6500/36E-85A0	D1	85A0	624		130		200	320	28	4	385	402	40	203	394	360	378
MVE 9000/3E-85A0	MVE 9000/36E-85A0	D1	85A0	624		130		200	320	28	4	385	402	40	203	394	360	378
MVE 6500/3E-86A0	MVE 6500/36E-86A0	D1	86A0	624		130		200	320	28	4	385	402	40	203	394	360	378
MVE 9000/3E-86A0	MVE 9000/36E-86A0	D1	86A0	624		130		200	320	28	4	385	402	40	203	394	360	378

NOTE: Dimensions with coarse degree of accuracy related to UNI 22768/1

This information is provided without warranty, representation, inducement or licence of any kind. It is accurate to the best OLI knowledge or is obtained from sources believed to be accurate. OLI therefore assumes no legal responsibility.

MVE STANDARD RANGE

4 POLES - 1500/1800 rpm

Wm (Kgcm)		Model		Centrifugal Force (kg)		Weight (kg)		ELECTRICAL SPECIFICATIONS Input Power (kW)		Nominal Current A max. (Y)		Ia/In		Cable Gland	CERTIFICATE Class II Div.2	II 2D
50Hz	60Hz	50 Hz	60 Hz	50Hz	60Hz	50Hz	60Hz	50Hz	60Hz	50Hz (400V)	60Hz (460V)	50Hz	60Hz	Metric	Temp. Class	Temp. Class
2.0	2.0	MVE 40/15E-10A0	MVE 40/18E-10A0	25	36	5		0.05	0.04	0.31	0.31	2.2	2.2	M16	T4	100 °C
6.0	4.2	MVE 90/15E-20A0	MVE 90/18E-20A0	75	76	7		0.07	0.08	0.31	0.25	2.2	2.2	M20	T4	100 °C
6.0	4.2	MVE 90/15E-23A0	MVE 90/18E-23A0	75	76	7		0.07	0.08	0.31	0.25	2.2	2.2	M20	T4	100 °C
15.4	10.8	MVE 200/15E-30A0	MVE 200/18E-30A0	194	196	12		0.12	0.15	0.49	0.50	2.2	2.2	M20	T4	100 °C
33.4	23.4	MVE 400/15E-40A0	MVE 400/18E-40A0	420	423	20		0.27	0.32	0.84	0.86	2.7	2.7	M20	T4	135 °C
40.1	28.1	MVE 500/15E-40A0	MVE 500/18E-40A0	504	508	21		0.35	0.40	1.06	1.09	3.0	2.9	M20	T4	135 °C
26.6	18.6	MVE 300/15E-50A0	MVE 300/18E-50A0	334	336	22		0.62	0.73	1.32	1.20	3.2	3.4	M20	T4	135 °C
26.6	18.6	MVE 300/15E-51A0	MVE 300/18E-51A0	334	336	22		0.62	0.73	1.32	1.20	3.2	3.4	M20	T4	135 °C
56.8	39.4	MVE 700/15E-50A0	MVE 700/18E-50A0	714	712	27		0.62	0.73	1.32	1.20	3.2	3.4	M20	T4	135 °C
56.8	39.4	MVE 710/15E-50A0	MVE 710/18E-50A0	714	712	27		0.62	0.73	1.32	1.20	3.2	3.4	M20	T4	135 °C
75.6	52.9	MVE 950/15E-50A0	MVE 950/18E-50A0	950	957	33		0.64	0.77	1.40	1.35	4.2	4.2	M20	T4	135 °C
88.7	62.0	MVE 1100/15E-50A0	MVE 1100/18E-50A0	1,114	1,122	36		0.64	0.77	1.40	1.35	4.0	4.0	M20	T4	135 °C
87.7	61.4	MVE 1100/15E-51A0	MVE 1100/18E-51A0	1,102	1,110	48		0.64	0.77	1.40	1.35	4.0	4.0	M20	T4	135 °C
108.6	76.7	MVE 1400/15E-60A0	MVE 1400/18E-60A0	1,364	1,388	63.5	60.5	0.70	0.84	1.78	1.78	4.2	4.2	M25	T4	135 °C
137.3	92.0	MVE 1700/15E-60A0	MVE 1700/18E-60A0	1,725	1,664	67.5	64	1.13	1.30	2.16	2.09	4.9	4.7	M25	T4	135 °C
187.7	137.4	MVE 2400/15E-60A0	MVE 2400/18E-60A0	2,358	2,485	68	65	1.57	1.88	3.20	3.20	5.1	5.1	M25	T4	135 °C
203.5	135.6	MVE 2500/15E-70A0	MVE 2500/18E-70A0	2,557	2,454	83.5	74	1.76	2.00	3.08	3.00	6.2	6.3	M25	T4	135 °C
248.7	169.8	MVE 3000/15E-70A0	MVE 3000/18E-70A0	3,124	3,071	85	78	1.90	2.30	3.68	3.30	6.7	6.8	M25	T4	135 °C
306.7	204.7	MVE 3800/15E-75A0	MVE 3800/18E-75A0	3,853	3,704	125	113	2.20	2.60	4.15	4.15	7.0	7.0	M32	T4	135 °C
343.2	240.9	MVE 4300/15E-75A0	MVE 4300/18E-75A0	4,312	4,359	136	120	2.50	3.00	4.50	4.60	7.2	7.4	M32	T4	135 °C
437.4	303.7	MVE 5500/15E-80A0	MVE 5500/18E-80A0	5,495	5,495	181	169	2.88	3.45	6.50	5.50	7.3	7.2	M32	T4	135 °C
										A max. (Δ)						
576.8	397.3	MVE 7200/15E-85A0	MVE 7200/18E-85A0	7,246	7,188	237	231	4.00	4.80	8.50	8.70	7.0	7.1	M32	T4	135 °C
718.0	498.8	MVE 9000/15E-85A0	MVE 9000/18E-85A0	9,020	9,023	252	241	7.35	8.50	13.40	12.00	7.2	7.2	M32	T4	135 °C
579.9	406.0	MVE 7200/15E-86A0	MVE 7200/18E-86A0	7,286	7,345	237	231	6.00	6.50	11.00	10.80	4.7	4.5	M32	T4	135 °C
724.8	507.0	MVE 9000/15E-86A0	MVE 9000/18E-86A0	9,106	9,172	252	241	6.00	6.50	11.00	10.80	4.7	4.5	M32	T4	135 °C
800.1	588.3	MVE 10000/15E-90A0	MVE 10000/18E-90A0	10,052	10,643	300	286	5.40	7.00	13.00	13.00	6.7	6.6	M32	T4	135 °C
835.7	581.3	MVE 10000/15E-91A0	MVE 10000/18E-91A0	10,499	10,517	300	286	7.00	8.20	13.10	13.10	7.2	7.7	M32	T4	135 °C
939	655	MVE 11500/15E-100A0	MVE 11500/18E-100A0	11,779	11,853	445	422	9.0	10.0	15.5	15.5	7.0	7.0	M32	T4	135 °C
1,142	838	MVE 14500/15E-100A0	MVE 14500/18E-100A0	14,352	15,153	460	442	11.0	13.0	18.5	18.5	8.0	8.0	M32	T4	135 °C

UP TO SIZE 60 (NOT INCLUDED)
60Hz masses = 50Hz masses adjusted at 70%
Except for model MVE 1100/15 - 1100/18

ABOVE SIZE 60 (INCLUDED)
Specific masses for 60Hz

To convert kg into Newton: N = 9.81 · kg

- II2D Ex tb IIIC Tx Db IP66
- Equipment and protective system intended for use in potentially explosive atmospheres (Zone 21) - Directive 2014/34/UE
- Compliance with Essential Health and Safety Requirements
- IEC 60034-1, IEC EN 60079-0, IEC EN 60079-31

Model		Drawing	Size	DIMENSIONAL SPECIFICATIONS (mm)														
				C		M		A	B	Ø G	Holes	D	E	F	H	I	L	N
50 Hz	60 Hz			50Hz	60Hz	50Hz	60Hz				n°							
MVE 40/15E-10A0	MVE 40/18E-10A0	A	10A0	213		45		Multiple Footprint 62-74 33	106 83-102	9 7	4	130	135	11	50	96	107	85
MVE 90/15E-20A0	MVE 90/18E-20A0	B	20A0	233		54		62-74	106	9	4	130	154	15	65	125	120	112
MVE 90/15E-23A0	MVE 90/18E-23A0	G	23A0	222		55		Multiple Footprint 62-74 65 115 135	106 140 135 115	9 13 11 11	4	164	140	25	82	116	159	110
MVE 200/15E-30A0	MVE 200/18E-30A0	C	30A0	274		52		Multiple Footprint 80 90 124 135	110 125 110 115	11 13 11 11	4	150	173	15	79	150	166	134
MVE 400/15E-40A0	MVE 400/18E-40A0	D1	40A0	330		78		105	140	13	4	170	196	20	92	174	166	160
MVE 500/15E-40A0	MVE 500/18E-40A0	D1	40A0	330		78		105	140	13	4	170	196	20	92	174	166	160
MVE 300/15E-50A0	MVE 300/18E-50A0	D1	50A0	321		62		120	170	17	4	208	210	22	96	185	192	170
MVE 300/15E-51A0	MVE 300/18E-51A0	D1	51A0	321		62		120	170	17	4	208	220	25	105	202	192	187
MVE 700/15E-50A0	MVE 700/18E-50A0	D1	50A0	391		97		120	170	17	4	208	210	22	96	185	192	170
MVE 710/15E-50A0	MVE 710/18E-50A0	D1	50A0	391		97		120	170	17	4	208	210	22	96	185	192	170
MVE 950/15E-50A0	MVE 950/18E-50A0	D1	50A0	455		129		120	170	17	4	208	210	22	96	185	192	170
MVE 1100/15E-50A0	MVE 1100/18E-50A0	D1	50A0	455		129		120	170	17	4	208	210	22	96	185	192	170
MVE 1100/15E-51A0	MVE 1100/18E-51A0	D1	51A0	414		106		120	170	17	4	208	220	25	105	202	192	187
MVE 1400/15E-60A0	MVE 1400/18E-60A0	D1	60A0	446		112		140	190	17	4	230	260	26	124	240	218	222
MVE 1700/15E-60A0	MVE 1700/18E-60A0	D1	60A0	446		112		140	190	17	4	230	260	26	124	240	218	222
MVE 2400/15E-60A0	MVE 2400/18E-60A0	D1	60A0	490	446	134	112	140	190	17	4	230	260	26	124	240	218	222
MVE 2500/15E-70A0	MVE 2500/18E-70A0	D1	70A0	501		123		155	225	22	4	275	290	30	140	256	250	236
MVE 3000/15E-70A0	MVE 3000/18E-70A0	D1	70A0	535	501	140	123	155	225	22	4	275	290	30	140	256	250	236
MVE 3800/15E-75A0	MVE 3800/18E-75A0	D1	75A0	564	536	151	117	155	255	23.5	4	304	314	30	147	285	277	265
MVE 4300/15E-75A0	MVE 4300/18E-75A0	D1	75A0	584	564	151	141	155	255	23.5	4	304	314	30	147	285	277	265
MVE 5500/15E-80A0	MVE 5500/18E-80A0	E1	80A0	603		143		180	280	26	4	332	360	37	167	345	304	310
MVE 7200/15E-85A0	MVE 7200/18E-85A0	D1	85A0	624		130		200	320	28	4	385	402	40	203	394	360	378
MVE 9000/15E-85A0	MVE 9000/18E-85A0	D1	85A0	624		130		200	320	28	4	385	402	40	203	394	360	378
MVE 7200/15E-86A0	MVE 7200/18E-86A0	D1	86A0	624		130		200	320	28	4	385	402	40	203	394	360	378
MVE 9000/15E-86A0	MVE 9000/18E-86A0	D1	86A0	624		130		200	320	28	4	385	402	40	203	394	360	378
MVE 10000/15E-90A0	MVE 10000/18E-90A0	E1	90A0	728		170		125	380	39	6	452	415	40	205	394	380	378
MVE 10000/15E-91A0	MVE 10000/18E-91A0	E1	91A0	728		170		125	380	39	6	452	415	40	205	394	380	378
MVE 11500/15E-100A0	MVE 11500/18E-100A0	E	100	890		210		140	440	45	6	530	484	37	232	446	470	424
MVE 14500/15E-100A0	MVE 14500/18E-100A0	E	100	890		210		140	440	45	6	530	484	37	232	446	470	424

NOTE: Dimensions with coarse degree of accuracy related to UNI 22768/1

This information is provided without warranty, representation, inducement or licence of any kind. It is accurate to the best OLI knowledge or is obtained from sources believed to be accurate. OLI therefore assumes no legal responsibility.

Intertek

» Class II Div.2 Group F, G T4
» Conform to UL 1004-1,UL 1004-3, UL60079-31, UL60079-0, CSA 60079-0, CSA 60079- 31, CSA 22.2 N°100, CSA 22.2 N°77

MVE STANDARD RANGE

6 POLES - 1000/1200 rpm

Wm (Kgcm)		Model		Centrifugal Force (kg)		Weight (kg)		ELECTRICAL SPECIFICATIONS Input Power (kW)		Nominal Current A max. (Y)		Ia/In		Cable Gland	CERTIFICATE Class II Div.2	II 2D
50Hz	60Hz	50Hz	60Hz	50Hz	60Hz	50Hz	60Hz	50Hz	60Hz	50Hz (400V)	60Hz (460V)	50Hz	60Hz	Metric	Temp. Class	Temp. Class
9.5	6.6	MVE 50/1E-30A0	MVE 50/12E-30A0	53	53	10		0.12	0.14	0.30	0.40	2.2	2.2	M20	T4	100 °C
18.8	13.2	MVE 100/1E-30A0	MVE 100/12E-30A0	105	106	11		0.12	0.14	0.30	0.40	2.2	2.2	M20	T4	100 °C
33.5	23.4	MVE 200/1E-40A0	MVE 200/12E-40A0	187	188	19		0.15	0.18	0.65	0.63	2.2	2.2	M20	T4	135 °C
56.9	39.9	MVE 300/1E-50A0	MVE 300/12E-50A0	318	320	26		0.25	0.30	0.67	0.64	2.7	2.7	M20	T4	135 °C
91.9	64.3	MVE 500/1E-50A0	MVE 500/12E-50A0	513	517	34		0.55	0.40	1.22	1.15	3.0	2.9	M20	T4	135 °C
91.9	91.9	MVE 510/1E-50A0	MVE 510/12E-50A0	513	739	34		0.55	0.40	1.20	1.15	3.0	2.9	M20	T4	135 °C
137.4	108.6	MVE 800/1E-60A0	MVE 800/12E-60A0	767	873	60	58	0.75	0.80	1.42	1.32	3.4	3.3	M25	T4	135 °C
187.7	137.3	MVE 1100/1E-60A0	MVE 1100/12E-60A0	1,048	1,104	78	72	0.75	0.80	1.42	1.32	3.4	3.3	M25	T4	135 °C
284.8	196.5	MVE 1500/1E-60A0	MVE 1500/12E-60A0	1,590	1,580	84	73	0.90	1.08	1.80	2.00	3.5	3.5	M25	T4	135 °C
299.6	203.5	MVE 1600/1E-70A0	MVE 1600/12E-70A0	1,673	1,636	90	79	0.90	1.08	2.40	2.30	3.9	3.8	M25	T4	135 °C
373.1	248.7	MVE 2100/1E-70A0	MVE 2100/12E-70A0	2,083	2,000	105	91	1.50	1.80	3.00	3.20	4.5	4.6	M25	T4	135 °C
401.0	275.2	MVE 2200/1E-70A0	MVE 2200/12E-70A0	2,239	2,213	107	93	1.50	1.80	3.00	3.20	4.5	4.6	M25	T4	135 °C
467.4	306.7	MVE 2600/1E-75A0	MVE 2600/12E-75A0	2,610	2,466	149	132	1.96	2.10	4.10	4.00	5.0	5.0	M32	T4	135 °C
540.3	379.7	MVE 3000/1E-75A0	MVE 3000/12E-75A0	3,017	3,053	155	138	2.20	2.40	4.50	4.30	5.2	5.2	M32	T4	135 °C
702.5	465.6	MVE 3700/1E-75A0	MVE 3700/12E-75A0	3,797	3,744	155	142	2.20	2.40	4.50	4.30	5.2	5.2	M32	T4	135 °C
680.4	437.4	MVE 3800/1E-80A0	MVE 3800/12E-80A0	3,799	3,517	216	195	2.50	3.00	5.50	5.30	6.1	6.2	M32	T4	135 °C
838.3	584.2	MVE 4700/1E-80A0	MVE 4700/12E-80A0	4,681	4,697	220	201	3.20	3.90	6.50	6.95	5.7	5.9	M32	T4	135 °C
929.9	654.6	MVE 5200/1E-85A0	MVE 5200/12E-85A0	5,192	5,263	264	248	3.80	4.00	6.92	6.36	5.7	5.7	M32	T4	135 °C
1,165.2	824.0	MVE 6500/1E-85A0	MVE 6500/12E-85A0	6,506	6,625	288	265	4.30	5.00	7.76	7.81	6.4	6.2	M32	T4	135 °C
										A max. (Δ)						
1,436.0	929.8	MVE 8000/1E-85A0	MVE 8000/12E-85A0	8,018	7,476	309	274	5.50	6.60	12.60	11.60	6.2	6.4	M32	T4	135 °C
1,600.4	1,165.2	MVE 9000/1E-85A0	MVE 9000/12E-85A0	8,936	9,369	322	291	6.20	7.45	13.20	12.60	6.5	6.4	M32	T4	135 °C
1,434.0	929.8	MVE 8000/1E-86A0	MVE 8000/12E-86A0	8,007	7,476	309	274	4.60	5.50	9.00	10.00	6.0	6.2	M32	T4	135 °C
1,598.0	1,165.2	MVE 9000/1E-86A0	MVE 9000/12E-86A0	8,923	9,369	322	291	4.60	5.50	9.00	10.00	6.0	6.2	M32	T4	135 °C
1,788.4	1,240.0	MVE 10000/1E-90A0	MVE 10000/12E-90A0	9,986	9,970	374	348	6.10	6.40	14.00	12.70	6.6	6.6	M32	T4	135 °C
2,329.8	1,647.4	MVE 13000/1E-90A0	MVE 13000/12E-90A0	13,009	13,246	411	364	7.50	8.30	16.40	16.00	6.4	6.5	M32	T4	135 °C
1,802.9	1,240.0	MVE 10000/1E-91A0	MVE 10000/12E-91A0	10,067	9,970	373	348	6.40	7.70	13.00	14.50	6.0	6.0	M32	T4	135 °C
2,056.9	1,433.0	MVE 11400/1E-91A0	MVE 11400/12E-91A0	11,485	11,522	404	361	6.40	7.70	13.00	14.50	6.0	6.0	M32	T4	135 °C
2,311.0	1,647.4	MVE 13000/1E-91A0	MVE 13000/12E-91A0	12,904	13,246	411	364	8.00	8.90	17.20	18.10	5.6	6.3	M32	T4	135 °C
2,253	1,550	MVE 12000/1E-100A0	MVE 12000/12E-100A0	12,580	12,466	522	476	8.0	9.5	15.0	15.0	5.0	5.5	M32	T4	135 °C
2,634	1,856	MVE 15000/1E-105A0	MVE 15000/12E-105A0	14,706	14,923	672	630	10.1	12.0	18.0	18.0	5.8	5.8	M32	T4	135 °C
3,220	2,147	MVE 17500/1E-105A0	MVE 17500/12E-105A0	17,980	17,264	744	684	11.9	14.2	21.0	21.0	5.6	5.9	M32	T4	135 °C
3,632	2,525	MVE 19500/1E-105A0	MVE 19500/12E-105A0	20,285	20,299	768	728	12.0	14.5	24.0	24.0	5.4	5.6	M32	T4	135 °C
4,067	2,622	MVE 22000/1E-110A0	MVE 22000/12E-110A0	22,711	21,079	916	868	13.9	17.0	28.0	28.0	4.8	5.3	M32	T4	135 °C
4,572	3,163	MVE 25000/1E-110A0	MVE 25000/12E-110A0	25,532	25,432	994	937	13.9	17.0	28.0	28.0	4.8	5.3	M32	T4	135 °C

UP TO SIZE 60 (NOT INCLUDED)
60Hz masses = 50Hz masses adjusted at 70%

ABOVE SIZE 60 (INCLUDED)
Specific masses for 60Hz

To convert kg into Newton: N = 9.81 · kg

- II2D Ex tb IIIC Tx Db IP66
- Equipment and protective system intended for use in potentially explosive atmospheres (Zone 21) - Directive 2014/34/UE
- Compliance with Essential Health and Safety Requirements
- IEC 60034-1, IEC EN 60079-0, IEC EN 60079-31

Technical drawings in the last page

DIMENSIONAL SPECIFICATIONS (mm)

Model 50Hz	Model 60Hz	Drawing	Size	C 50Hz	C 60Hz	M 50Hz	M 60Hz	A	B	Ø G	Holes n°	D	E	F	H	I	L	N
MVE 50/1E-30A0	MVE 50/12E-30A0	C	30A0	274		52		Multiple Footprint			4	150	173	15	79	150	166	134
								80	110	11								
								90	125	13								
								124	110	11								
								135	115	11								
MVE 100/1E-30A0	MVE 100/12E-30A0	C	30A0	304		67		Multiple Footprint			4	150	173	15	79	150	166	134
								80	110	11								
								90	125	13								
								124	110	11								
								135	115	11								
MVE 200/1E-40A0	MVE 200/12E-40A0	D1	40A0	330		78		105	140	13	4	170	196	20	92	174	166	160
MVE 300/1E-50A0	MVE 300/12E-50A0	D1	50A0	391		97		120	170	17	4	208	210	22	96	185	192	170
MVE 500/1E-50A0	MVE 500/12E-50A0	D1	50A0	455		129		120	170	17	4	208	210	22	96	185	192	170
MVE 510/1E-50A0	MVE 510/12E-50A0	D1	50A0	455		129		120	170	17	4	208	210	22	96	185	192	170
MVE 800/1E-60A0	MVE 800/12E-60A0	D1	60A0	446		112		140	190	17	4	230	260	26	124	240	218	222
MVE 1100/1E-60A0	MVE 1100/12E-60A0	D1	60A0	490	446	134	112	140	190	17	4	230	260	26	124	240	218	222
MVE 1500/1E-60A0	MVE 1500/12E-60A0	D1	60A0	566	490.0	172	134	140	190	17	4	230	260	26	124	240	218	222
MVE 1600/1E-70A0	MVE 1600/12E-70A0	D1	70A0	563	501	154	123	155	225	22	4	275	290	30	140	256	250	236
MVE 2100/1E-70A0	MVE 2100/12E-70A0	D1	70A0	623	563	184	154	155	225	22	4	275	290	30	140	256	250	236
MVE 2200/1E-70A0	MVE 2200/12E-70A0	D1	70A0	623		184		155	225	22	4	275	290	30	140	256	250	236
MVE 2600/1E-75A0	MVE 2600/12E-75A0	D1	75A0	692	584	205	151	155	255	23.5	4	304	314	30	147	285	277	265
MVE 3000/1E-75A0	MVE 3000/12E-75A0	D1	75A0	692	584	205	151	155	255	23.5	4	304	314	30	147	285	277	265
MVE 3700/1E-75A0	MVE 3700/12E-75A0	D1	75A0	734	692	226	205	155	255	23.5	4	304	314	30	147	285	277	265
MVE 3800/1E-80A0	MVE 3800/12E-80A0	D1	80A0	683	603	183	143	180	280	26	4	332	354	32	170	330	312	311
MVE 4700/1E-80A0	MVE 4700/12E-80A0	D1	80A0	733	683	208	183	180	280	26	4	332	354	32	170	330	312	311
MVE 5200/1E-85A0	MVE 5200/12E-85A0	D1	85A0	704	624	170.0	130.0	200	320	28	4	385	402	40	203	394	360	378
MVE 6500/1E-85A0	MVE 6500/12E-85A0	D1	85A0	704		170		200	320	28	4	385	402	40	203	394	360	378
MVE 8000/1E-85A0	MVE 8000/12E-85A0	D1	85A0	774	704	205	170	200	320	28	4	385	402	40	203	394	360	378
MVE 9000/1E-85A0	MVE 9000/12E-85A0	D1	85A0	774	704	205	170	200	320	28	4	385	402	40	203	394	360	378
MVE 8000/1E-86A0	MVE 8000/12E-86A0	D1	86A0	774		205		200	320	28	4	385	402	40	203	394	360	378
MVE 9000/1E-86A0	MVE 9000/12E-86A0	D1	86A0	774		205		200	320	28	4	385	402	40	203	394	360	378
MVE 10000/1E-90A0	MVE 10000/12E-90A0	E1	90A0	908	798	260	205	125	380	39	6	452	415	40	205	394	380	378
MVE 13000/1E-90A0	MVE 13000/12E-90A0	E1	90A0	948	798	280	205	125	380	39	6	452	415	40	205	394	380	378
MVE 10000/1E-91A0	MVE 10000/12E-91A0	E1	91A0	908		260		125	380	39	6	452	415	40	205	394	380	378
MVE 11400/1E-91A0	MVE 11400/12E-91A0	E1	91A0	908		260		125	380	39	6	452	415	40	205	394	380	378
MVE 13000/1E-91A0	MVE 13000/12E-91A0	E1	91A0	948		280		125	380	39	6	452	415	40	205	394	380	378
MVE 12000/1E-100A0	MVE 12000/12E-100A0	E	100	1,020		275		140	440	45	6	530	484	37	232	446	470	424
MVE 15000/1E-105A0	MVE 15000/12E-105A0	H	105	980		210		140	480	45	8	570	542	48	268	510	560	490
MVE 17500/1E-105A0	MVE 17500/12E-105A0	H	105	1,060		250		140	480	45	8	570	542	48	268	510	560	490
MVE 19500/1E-105A0	MVE 19500/12E-105A0	H	105	1,060		250		140	480	45	8	570	542	48	268	510	560	490
MVE 22000/1E-110A0	MVE 22000/12E-110A0	H	110	1,130		285		140	520	45	8	610	594	42	297	560	560	530
MVE 25000/1E-110A0	MVE 25000/12E-110A0	H	110	1,130		285		140	520	45	8	610	594	42	297	560	560	530

NOTE: Dimensions with coarse degree of accuracy related to UNI 22768/1

This information is provided without warranty, representation, inducement or licence of any kind. It is accurate to the best OLI knowledge or is obtained from sources believed to be accurate. OLI therefore assumes no legal responsibility.

Intertek

» Class II Div.2 Group F, G T4
» Conform to UL 1004-1,UL 1004-3, UL60079-31, UL60079-0, CSA 60079-0, CSA 60079- 31, CSA 22.2 N°100, CSA 22.2 N°77

MVE STANDARD RANGE

8 POLES – 750/900 rpm

Wm (Kgcm)		Model		Centrifugal Force (kg)		Weight (kg)		ELECTRICAL SPECIFICATIONS							CERTIFICATE	
								Input Power (kW)		Nominal Current **A max. (Y)**		Ia/In		Cable Gland	Class II Div.2	II 2D
50Hz	60Hz	50Hz	60Hz	50Hz	60Hz	50Hz	60Hz	50Hz	60Hz	50Hz (400V)	60Hz (460V)	50Hz	60Hz	Metric	Temp. Class	Temp. Class
33.4		MVE 150/075E-40A0	MVE 150/090E-40A0	105	151	21		0.23	0.25	1.14	1.14	1.7	1.7	M20	T4	135 °C
56.9		MVE 250/075E-50A0	MVE 250/090E-50A0	179	257	29		0.25	0.30	0.90	0.89	1.9	1.9	M20	T4	135 °C
84.0		MVE 400/075E-50A0	MVE 400/090E-50A0	264	380	34		0.25	0.30	0.90	0.89	2.1	2.1	M20	T4	135 °C
137.3		MVE 650/075E-60A0	MVE 650/090E-60A0	431	621	63		0.37	0.45	1.20	1.20	2.4	2.4	M25	T4	135 °C
187.7		MVE 900/075E-60A0	MVE 900/090E-60A0	589	849	70		0.55	0.54	1.23	1.29	2.7	2.7	M25	T4	135 °C
299.6		MVE 1300/075E-70A0	MVE 1300/090E-70A0	941	1,355	90		0.75	0.90	2.20	2.20	3.2	3.2	M25	T4	135 °C
467.4		MVE 2100/075E-75A0	MVE 2100/090E-75A0	1,468	2,114	150		1.00	1.20	2.81	2.89	4.4	4.3	M32	T4	135 °C
680.3		MVE 3100/075E-80A0	MVE 3100/090E-80A0	2,137	3,077	201		2.00	2.30	4.50	4.40	4.2	4.2	M32	T4	135 °C
838.4		MVE 3800/075E-80A0	MVE 3800/090E-80A0	2,633	3,792	219		2.50	3.00	6.00	6.00	4.1	4.2	M32	T4	135 °C
929.7		MVE 4200/075E-85A0	MVE 4200/090E-85A0	2,920	4,205	268		2.90	3.40	6.50	6.50	4.0	3.9	M32	T4	135 °C
1,165.2		MVE 5300/075E-85A0	MVE 5300/090E-85A0	3,660	5,270	289		3.70	4.30	8.00	8.20	4.0	4.4	M32	T4	135 °C
1,435.9		MVE 6500/075E-85A0	MVE 6500/090E-85A0	4,510	6,494	308		3.80	4.20	8.78	8.30	3.8	4.2	M32	T4	135 °C
										A max. (Δ)						
2,200.4		MVE 10000/075E-90A0	MVE 10000/090E-90A0	6,911	9,952	422		6.80	7.50	13.50	12.50	3.7	4.4	M32	T4	135 °C
2,311.0		MVE 10000/075E-91A0	MVE 10000/090E-91A0	7,258	10,452	422		6.00	7.00	14.40	14.00	4.7	4.7	M32	T4	135 °C
2,835	2,553	MVE 12000/075E-100A0	MVE 12000/090E-100A0	8,904	11,546	571	553	7.5	8.0	13.5	13.5	3.8	4.0	M32	T4	135 °C
3,713	3,220	MVE 14000/075E-105A0	MVE 14000/090E-105A0	11,661	14,563	751	725	9.0	10.6	19.0	19.0	4.5	5.0	M32	T4	135 °C
4,401	3,920	MVE 17000/075E-105A0	MVE 17000/090E-105A0	13,822	17,729	812	792	9.1	11.0	20.0	20.0	5.3	5.8	M32	T4	135 °C
5,857	4,999	MVE 22000/075E-110A0	MVE 22000/090E-110A0	18,395	22,610	982	937	13.8	16.5	28.0	28.0	5.6	5.2	M32	T4	135 °C
-	5,857	NA	MVE 26000/090E-110A0	-	26,489	-	982	-	16.5	-	28.0	-	5.2	M32	T4	135 °C

SIZE 40A0

SIZE 50A0

SIZE 60A0

UP TO SIZE 90 (INCLUDED)
60Hz masses = 50Hz masses adjusted at 100%

ABOVE SIZE 90 (NOT INCLUDED)
Specific masses for 60Hz

To convert kg into Newton: N = 9.81 · kg

- II2D Ex tb IIIC Tx Db IP66
- Equipment and protective system intended for use in potentially explosive atmospheres (Zone 21) - Directive 2014/34/UE
- Compliance with Essential Health and Safety Requirements
- IEC 60034-1, IEC EN 60079-0, IEC EN 60079-31

Model		Drawing	Size	DIMENSIONAL SPECIFICATIONS (mm)												
				C	M	A	B	Ø G	Holes	D	E	F	H	I	L	N
50Hz	60Hz			50Hz-60Hz	50Hz-60Hz				n°							
MVE 150/075E-40A0	MVE 150/090E-40A0	D1	40A0	330	78	105	140	13	4	170	196	20	92	174	166	160
MVE 250/075E-50A0	MVE 250/090E-50A0	D1	50A0	391	97	120	170	17	4	208	210	22	96	185	192	170
MVE 400/075E-50A0	MVE 400/090E-50A0	D1	50A0	455	129	120	170	17	4	208	210	22	96	185	192	170
MVE 650/075E-60A0	MVE 650/090E-60A0	D1	60A0	446	112	140	190	17	4	230	260	26	124	240	218	222
MVE 900/075E-60A0	MVE 900/090E-60A0	D1	60A0	490	134	140	190	17	4	230	260	26	124	240	218	222
MVE 1300/075E-70A0	MVE 1300/090E-70A0	D1	70A0	563	154	155	225	22	4	275	290	30	140	256	250	236
MVE 2100/075E-75A0	MVE 2100/090E-75A0	D1	75A0	692	205	155	255	23.5	4	304	314	30	147	285	277	265
MVE 3100/075E-80A0	MVE 3100/090E-80A0	D1	80A0	683	183	180	280	26	4	332	354	32	170	330	312	311
MVE 3800/075E-80A0	MVE 3800/090E-80A0	D1	80A0	733	208	180	280	26	4	332	354	32	170	330	312	311
MVE 4200/075E-85A0	MVE 4200/090E-85A0	D1	85A0	704	170	200	320	28	4	385	402	40	203	394	360	378
MVE 5300/075E-85A0	MVE 5300/090E-85A0	D1	85A0	704	170	200	320	28	4	385	402	40	203	394	360	378
MVE 6500/075E-85A0	MVE 6500/090E-85A0	D1	85A0	774	205	200	320	28	4	385	402	40	203	394	360	378
MVE 10000/075E-90A0	MVE 10000/090E-90A0	E1	90A0	948	280	125	380	39	6	452	415	40	205	394	380	378
MVE 10000/075E-91A0	MVE 10000/090E-91A0	E1	91A0	948	280	125	380	39	6	452	415	40	205	394	380	378
MVE 12000/075E-100A0	MVE 12000/090E-100A0	E	100	1,020	275	140	440	45	6	530	484	37	232	446	470	424
MVE 14000/075E-105A0	MVE 14000/090E-105A0	H	105	1,060	250	140	480	45	8	570	542	48	268	510	560	490
MVE 17000/075E-105A0	MVE 17000/090E-105A0	H	105	1,120	280	140	480	45	8	570	542	48	268	510	560	490
MVE 22000/075E-110A0	MVE 22000/090E-110A0	H	110	1,130	285	140	520	45	8	610	594	42	297	560	560	530
NA	MVE 26000/090E-110A0	H	110	1,130	285	140	520	45	8	610	594	42	297	560	560	530

Notes:

NOTE: Dimensions with coarse degree of accuracy related to UNI 22768/1

This information is provided without warranty, representation, inducement or licence of any kind. It is accurate to the best OLI knowledge or is obtained from sources believed to be accurate. OLI therefore assumes no legal responsibility.

MVE STANDARD RANGE

2 POLES SINGLE-PHASE - 3000/3600 rpm

Wm (Kgcm)		Model		Centrifugal Force (kg)		Weight (kg)		ELECTRICAL SPECIFICATIONS							CERTIFICATE	
								Input Power (kW)		Nominal Current A max		Cable Gland	Capacitor *		Class II Div.2	II 2D
50Hz	60Hz	50Hz	60Hz	50Hz	60Hz	50Hz	60Hz	50Hz	60Hz	50Hz (230V)	60Hz (115V)	Metric	50Hz (230V)	60Hz (115V)	Temp. Class	Temp. Class
1.3	1.0	MVE 60/3E-10A0-M	MVE 60/36E-10A0-M	66	71	4		0.08	0.09	0.43	1.03	M16	3.0	6.3	T4	100 °C
2.0	1.3	MVE 100/3E-10A0-M	MVE 100/36E-10A0-M	98	95	5		0.10	0.11	0.54	1.30	M16	4.0	8.0	T4	100 °C
3.7	2.6	MVE 200/3E-20A0-M	MVE 200/36E-20A0-M	187	189	7		0.18	0.21	1.14	2.62	M20	8.0	16.0	T4	100 °C
3.7	2.6	MVE 200/3E-23A0-M	MVE 200/36E-23A0-M	187	189	7		0.18	0.21	1.14	2.62	M20	8.0	16.0	T4	100 °C
6.4	4.5	MVE 300/3E-30A0-M	MVE 300/36E-30A0-M	321	323	10		0.27	0.28	1.58	3.43	M20	12.5	25.0	T4	100 °C

** NOTE: Capacitor not supplied with vibrator (to be ordered separately)*

SIZE 10A0

SIZE20A0

SIZE 30A0

To convert kg into Newton: N = 9.81 · kg

- II2D Ex tb IIIC Tx Db IP66
- Equipment and protective system intended for use in potentially explosive atmospheres (Zone 21) - Directive 2014/34/UE
- Compliance with Essential Health and Safety Requirements
- IEC 60034-1, IEC EN 60079-0, IEC EN 60079-31

Model		Drawing	Size	DIMENSIONAL SPECIFICATIONS (mm)														
				C		M		A	B	Ø G	Holes	D	E	F	H	I	L	N
50Hz	60Hz			50Hz	60Hz	50Hz	60Hz				n°							
MVE 60/3E-10A0-M	MVE 60/36E-10A0-M	A1	10A0	213		45		Multiple Footprint 62-74 33	106 83-102	9 7	4	130	135	11	50	96	107	85
MVE 100/3E-10A0-M	MVE 100/36E-10A0-M	A1	10A0	213		45		Multiple Footprint 62-74 33	106 83-102	9 7	4	130	135	11	50	96	107	85
MVE 200/3E-20A0-M	MVE 200/36E-20A0-M	B1	20A0	233		54		62-74	106	9	4	130	154	15	65	125	120	112
MVE 200/3E-23A0-M	MVE 200/36E-23A0-M	G	23A0	222		55		Multiple Footprint 62-74 65 115 135	106 140 135 115	9 13 11 11	4	164	140	25	82	116	159	110
MVE 300/3E-30A0-M	MVE 300/36E-30A0-M	C1	30A0	254		42		Multiple Footprint 80 90 124 135	110 125 110 115	11 13 11 11	4	154	173	15	79	150	166	134

Notes:

NOTE: Dimensions with coarse degree of accuracy related to UNI 22768/1

This information is provided without warranty, representation, inducement or licence of any kind. It is accurate to the best OLI knowledge or is obtained from sources believed to be accurate. OLI therefore assumes no legal responsibility.

MVE STANDARD RANGE

MVE-MICRO - 3000/3600 rpm

THREE-PHASE

Wm (kgcm)		Model		Centrifugal Force (kg)		Weight (kg)		ELECTRICAL SPECIFICATIONS						CERTIFICATE	
								Input Power (kW)		Nominal Current A max			Cable Gland	For 60Hz Class II Div.2	For 50Hz II3D
50Hz	60Hz	50Hz	60Hz	50Hz	60Hz	50Hz	60Hz	50Hz	60Hz	50Hz (230V)	50Hz (400V)	60Hz (460V)	Metric	Temp. Class	Temp. Class
0.4	0.4	MVE 21/3E-MICRO	MVE 21/36E-MICRO	20	29	2		0.04	0.04	0.21	0.12	0.12	M16	T4	100 °C
0.9	0.9	MVE 41/3E-MICRO	MVE41/36E-MICRO	45	65	2		0.06	0.06	0.30	0.18	0.18	M16	T4	100 °C

SINGLE-PHASE

Wm (kgcm)		Model		Centrifugal Force (kg)		Weight (kg)		ELECTRICAL SPECIFICATIONS					CERTIFICATE	
								Input Power (kW)		Nominal Current A max		Cable Gland *	For 60Hz Class II Div.2	For 50Hz II3D
50Hz	60Hz	50Hz	60Hz	50Hz	60Hz	50Hz	60Hz	50Hz	60Hz	50Hz (230V)	60Hz (115V)	Metric	Temp. Class	Temp. Class
0.1	0.1	MVE 3/3E-MICRO-M	MVE 3/36E-MICRO-M	4	6	1.6		0.03	0.04	0.30	0.80	M16	T4	100 °C
0.1	0.1	MVE 6/3E-MICRO-M	MVE 6/36E-MICRO-M	6	9	1.6		0.03	0.04	0.30	0.80	M16	T4	100 °C
0.4	0.4	MVE 21/3E-MICRO-M	MVE 21/36E-MICRO-M	20	29	2		0.04	0.07	0.20	0.80	M16	T4	100 °C
0.9	0.9	MVE 41/3E-MICRO-M	MVE 41/36E-MICRO-M	45	65	2.4		0.05	0.07	0.25	0.80	M16	T4	100 °C

MICRO

NOTE: Capacitor integrated in the cable

To convert kg into Newton: N = 9.81 · kg

- » II2D Ex tb IIIC Tx Db IP66
- » Equipment and protective system intended for use in potentially explosive atmospheres (Zone 21) - Directive 2014/34/UE
- » Compliance with Essential Health and Safety Requirements
- » IEC 60034-1, IEC EN 60079-0, IEC EN 60079-31

F

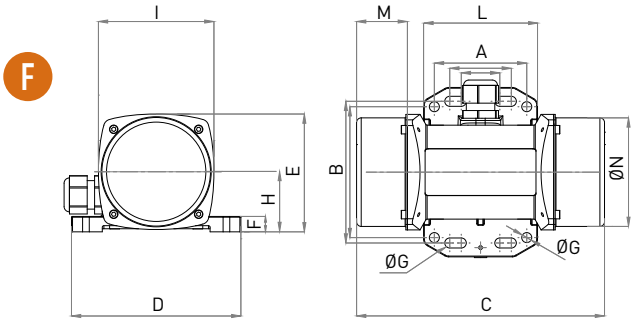

I

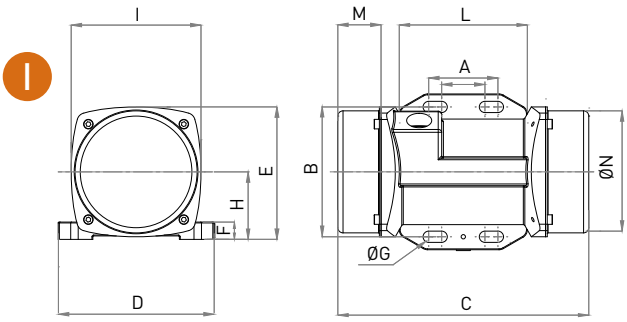

Model		Drawing	DIMENSIONAL SPECIFICATIONS (mm)												
			C	M	A	B	Ø G	Holes	D	E	F	H	I	L	N
50Hz	60Hz		50Hz	50Hz				N°							
MVE 21/3E-MICRO	MVE21/36E-MICRO	F	145	25	Multiple Footprint 25-40 60	 92 85	 6.5 6.5	4	110	76	10	39	75	74	70
MVE 41/3E-MICRO	MVE 41/36E-MICRO	F	161	33	Multiple Footprint 25-40 60	 92 85	 6.5 6.5	4	110	76	10	39	75	74	70

Model		Drawing	DIMENSIONAL SPECIFICATIONS (mm)												
			C	M	A	B	Ø G	Holes	D	E	F	H	I	L	N
50Hz	60Hz		50Hz	50Hz				N°							
MVE 3/3E-MICRO-M	MVE 3/36E-MICRO-M	F	145	25	Multiple Footprint 25-40 60	 92 85	 6.5 6.5	4	110	76	10	39	75	74	70
MVE 6/3E-MICRO-M	MVE 6/36E-MICRO-M	I	145	25	Multiple Footprint 25-40 -	 75 -	 6.5 -	4	90	76	10	39	75	74	70
MVE 21/3E-MICRO-M	MVE 21/36E-MICRO-M	F	145	25	Multiple Footprint 25-40 60	 92 85	 6.5 6.5	4	110	76	10	39	75	74	70
MVE 41/3E-MICRO-M	MVE 41/36E-MICRO-M	F	161	25	Multiple Footprint 25-40 60	 92 85	 6.5 6.5	4	110	76	10	39	75	74	70

Notes:

NOTE: Dimensions with coarse degree of accuracy related to UNI 22768/1

This information is provided without warranty, representation, inducement or licence of any kind. It is accurate to the best OLI knowledge or is obtained from sources believed to be accurate. OLI therefore assumes no legal responsibility.

» Class II Div.2 Group F, G T4
» Conform to UL 1004-1,UL 1004-3, UL60079-31, UL60079-0, CSA 60079-0, CSA 60079- 31, CSA 22.2 N°100, CSA 22.2 N°77

MVE STANDARD RANGE

MVE-DC DIRECT CURRENT - 3000 rpm

					ELECTRICAL SPECIFICATIONS			CERTIFICATE
Wm (kgcm)	Model	rpm	Centrifugal Force (kg)	Weight (kg)	Input Power (kW)	Nominal Current A max	Cable Gland	II3D
1.0	MVE 50/3N-10A0-12V	3,000	50	4.4	0.08	6.60	M16	100 °C
1.0	MVE 50/3N-10A0-24V	3,000	50	4.4	0.08	3.30	M16	100 °C
1.1	MVE 120/3N-23A0-12V	3,000	117	7.2	0.12	9.50	M20	100 °C
1.1	MVE 120/3N-23A0-24V	3,000	117	7.2	0.12	4.80	M20	100 °C
4.2	MVE 202/3N-23A0-12V	3,000	200	7.2	0.16	13.30	M20	100 °C
4.2	MVE 202/3N-23A0-24V	3,000	200	7.2	0.16	6.70	M20	100 °C
10.4	MVE 500/3N-40A0-24V	3,000	530	15.8	0.26	11.00	M20	100 °C
22.4	MVE 1500/3N-50A0-24V	3,000	1,616	21.6	0.52	21.50	M20	100 °C

SIZE 23A0

SIZE 40A0

SIZE 50A0

To convert kg into Newton: N = 9.81 · kg

- II3D Ex tc IIIC Tx IP66
- Equipment and protective system intended for use in potentially explosive atmospheres (Zone 22) - Directive 2014/34/UE
- Compliance with Essential Health and Safety Requirements
- IEC EN 60079-0, IEC EN 60079-31

Technical drawings in the last page

Model	Drawing	Size	DIMENSIONAL SPECIFICATIONS (mm)												
			C	M	A	B	Ø G	Holes N°	D	E	F	H	I	L	N
MVE 50/3N-10A0-12V	A	10A0	211	45	Multiple Footprint: 62-74	106	9	4	130	136	12	48	94	121	85
MVE 50/3N-10A0-24V	A	10A0	211	45	33	83-102	7	4	130	136	12	48	94	121	85
MVE 120/3N-23A0-12V	G	23A0	218	53	Multiple Footprint: 62-74	106	9	4	164	140	25	82	116	159	110
MVE 120/3N-23A0-24V	G	23A0	218	53	65	140	13	4	164	140	25	82	116	159	110
MVE 202/3N-23A0-12V	G	23A0	218	53	115	135	11	4	164	140	25	82	116	159	110
MVE 202/3N-23A0-24V	G	23A0	218	53	135	115	11	4	164	140	25	82	116	159	110
MVE 500/3N-40A0-24V	D1	40A0	330	78	105	140	13	4	170	195	15	92	174	166	160
MVE 1500/3N-50A0-24V	D1	50A0	321	62	120	170	18	4	208	209	18	96	184	198	169

Notes:

NOTE: Dimensions with coarse degree of accuracy related to UNI 22768/1

This information is provided without warranty, representation, inducement or licence of any kind. It is accurate to the best OLI knowledge or is obtained from sources believed to be accurate. OLI therefore assumes no legal responsibility.

MVE-Exe INCREASED SAFETY

2 POLES - 3000/3600 rpm

Wm (kgcm)		Model		Centrifugal Force (kg)		Weight (kg)		ELECTRICAL SPECIFICATIONS							CERTIFICATE			
								Input Power (kW)		Nominal Current **A max. (Y)**		Ia/In		Cable Gland	Ex e	Class II Div.2	II 2G	II 2D
50Hz	60Hz	50Hz	60Hz	50Hz	60Hz	50Hz (Kg)	60Hz (Kg)	50 Hz	60 Hz	50Hz (400V)	60Hz (460V)	50Hz	60Hz	Metric	tE	Temp. Class	Temp. Class	Temp. Class
3.7	2.6	MVE 200/3X-20A0	MVE 200/36X-20A0	187	189	7		0.15	0.18	0.35	0.30	3.	3.5	M20	5	T4	T3	100 °C
3.7	2.6	MVE 200/3X-23A0	MVE 200/36X-23A0	187	189	7		0.15	0.18	0.35	0.30	3.5	3.5	M20	5	T4	T3	100 °C
6.4	4.5	MVE 300/3X-30A0	MVE 300/36X-30A0	321	323	10		0.25	0.28	0.52	0.45	3.8	3.7	M20	5	T4	T3	100 °C
8.0	5.7	MVE 400/3X-30A0	MVE 400/36X-30A0	407	411	10		0.27	0.33	0.58	0.60	3.7	3.7	M20	5	T4	T3	100 °C
10.3	7.4	MVE 500/3X-40A0	MVE 500/36X-40A0	530	534	16		0.50	0.58	0.96	0.97	4.2	4.4	M20	5	T4	T3	135 °C
14.9	10.6	MVE 700/3X-40A0	MVE 700/36X-40A0	758	765	17		0.59	0.61	1.25	1.24	4.5	5.2	M20	5	T4	T3	135 °C
15.7	11.1	MVE 800/3X-50A0	MVE 800/36X-50A0	794	800	20		0.70	0.84	1.45	1.50	4.0	4.0	M20	5	T4	T3	135 °C
20.3	14.0	MVE 1200/3X-50A0	MVE 1200/36X-50A0	1,005	1,013	21		0.95	1.15	1.85	1.95	4.6	4.7	M20	5	T4	T3	135 °C
26.6	18.6	MVE 1300/3X-50A0	MVE 1300/36X-50A0	1,355	1,365	22		1.30	1.38	2.44	2.25	5.4	5.2	M20	5	T4	T3	135 °C
26.6	18.6	MVE 1300/3X-51A0	MVE 1300/36X-51A0	1,355	1,365	22		1.30	1.38	2.44	2.25	5.4	5.2	M20	5	T4	T3	135 °C
31.3	22.2	MVE 1600/3X-60A0	MVE 1600/36X-60A0	1,601	1,608	51	50	1.54	1.60	2.94	2.61	6.1	6.4	M25	5	T4	T3	135 °C
36.8	27.6	MVE 2000/3X-60A0	MVE 2000/36X-60A0	2,027	1,997	52	50	2.10	2.10	3.75	3.42	6.7	6.6	M25	5	T4	T3	135 °C
46.0	31.9	MVE 2300/3X-60A0	MVE 2300/36X-60A0	2,302	2,306	53	51	2.40	2.45	4.44	3.45	6.2	6.5	M25	5	T4	T3	135 °C
68.1	43.9	MVE 3200/3X-75A1	MVE 3200/36X-75A1	3,252	3,176	103	101	2.76	2.90	5.30	4.61	8.5	8.4	M32	5	T4	T3	135 °C
79.4	56.0	MVE 4000/3X-75A1	MVE 4000/36X-75A1	4,033	4,052	107	104	2.90	2.90	5.30	4.61	8.7	9.9	M32	5	T4	T3	135 °C

SIZE 40A0

SIZE 50A0

SIZE 60A0

UP TO SIZE 60 (NOT INCLUDED)
60Hz masses = 50Hz masses adjusted at 70%

ABOVE SIZE 60 (INCLUDED)
Specific masses for 60Hz

To convert kg into Newton: N = 9.81 · kg

- II 2D Ex tb IIIC Tx Db IP66
- II 2G Ex eb IIC T3 Gb
- Equipment and protective system intended for use in potentially explosive atmospheres (Zone 21 - Zone 1) - Directive 2014/34/UE
- Compliance with Essential Health and Safety Requirements
- IEC 60034-1, IEC EN 60079-0, IEC EN 60079-31, IEC EN 60079-7

Model		Drawing	Size	DIMENSIONAL SPECIFICATIONS (mm)														
				C		M		A	B	Ø G	Holes	D	E	F	H	I	L	N
50Hz	60Hz			50Hz	60Hz	50Hz	60Hz				n°							
MVE 200/3X-20A0	MVE 200/36X-20A0	B1	20A0	233		54		62-74	106	9	4	130	154	15	65	125	120	112
MVE 200/3X-23A0	MVE 200/36X-23A0	G	23A0	222		55		Multiple Footprint 62-74 65 115 135	 106 140 135 115	 9 13 11 11	4	164	140	25	82	116	159	110
MVE 300/3X-30A0	MVE 300/36X-30A0	C1	30A0	254		42		Multiple Footprint 80 90 124 135	 110 125 110 115	 11 13 11 11	4	150	173	15	79	150	166	134
MVE 400/3X-30A0	MVE 400/36X-30A0	C1	30A0	274		52		Multiple Footprint 80 90 124 135	 110 125 110 115	 11 13 11 11	4	150	173	15	79	150	166	134
MVE 500/3X-40A0	MVE 500/36X-40A0	D1	40A0	330		78		105	140	13	4	170	196	20	92	169	166	158
MVE 700/3X-40A0	MVE 700/36X-40A0	D1	40A0	330		78		105	140	13	4	170	196	20	92	169	166	158
MVE 800/3X-50A0	MVE 800/36X-50A0	D1	50A0	321		62		120	170	17	4	208	210	22	96	185	192	170
MVE 1200/3X-50A0	MVE 1200/36X-50A0	D1	50A0	321		62		120	170	17	4	208	210	22	96	185	192	170
MVE 1300/3X-50A0	MVE 1300/36X-50A0	D1	50A0	321		62		120	170	17	4	208	210	22	96	185	192	170
MVE 1300/3X-51A0	MVE 1300/36X-51A0	D1	51A0	310		55		120	170	17	4	208	220	25	105	203	192	187
MVE 1600/3X-60A0	MVE 1600/36X-60A0	D1	60A0	402		90		140	190	17	4	230	260	26	124	240	218	222
MVE 2000/3X-60A0	MVE 2000/36X-60A0	D1	60A0	402		90		140	190	17	4	230	260	26	124	240	218	222
MVE 2300/3X-60A0	MVE 2300/36X-60A0	D1	60A0	402		90		140	190	17	4	230	260	26	124	240	218	222
MVE 3200/3X-75A1	MVE 3200/36X-75A1	D1	75A1	516		117		155	255	25	4	304	314	30	147	285	277	265
MVE 4000/3X-75A1	MVE 4000/36X-75A1	D1	75A1	516		117		155	255	25	4	304	314	30	147	285	277	265

Notes:

NOTE: Dimensions with coarse degree of accuracy related to UNI 22768/1

This information is provided without warranty, representation, inducement or licence of any kind. It is accurate to the best OLI knowledge or is obtained from sources believed to be accurate. OLI therefore assumes no legal responsibility.

MVE-Exe INCREASED SAFETY

4 POLES - 1500/1800 rpm

Wm (kgcm)		Model		Centrifugal Force (kg)		Weight (kg)		ELECTRICAL SPECIFICATIONS							CERTIFICATE			
								Input Power (kW)		Nominal Current **A max. (Y)**		Ia / In		Cable Gland	Ex e	Class II Div.2	II 2G	II 2D
50Hz	60Hz	50Hz	60Hz	50Hz	60Hz	50Hz	60Hz	50Hz	60Hz	50Hz (400V)	60Hz (460V)	50Hz	60Hz	Metric	tE	Temp. Class	Temp. Class	Temp. Class
15.4	10.8	MVE 200/15X-30A0	MVE 200/18X-30A0	194	196	12		0.12	0.15	0.49	0.50	2.2	2.2	M20	5	T4	T3	100 °C
33.4	23.4	MVE 400/15X-40A0	MVE 400/18X-40A0	420	423	20		0.27	0.32	0.84	0.86	2.7	2.7	M20	5	T4	T3	135 °C
40.1	28.1	MVE 500/15X-40A0	MVE 500/18X-40A0	504	508	21		0.35	0.40	1.06	1.09	3.0	2.9	M20	5	T4	T3	135 °C
26.6	18.6	MVE 300/15X-50A0	MVE 300/18X-50A0	334	336	22		0.62	0.73	1.32	1.20	3.2	3.4	M20	5	T4	T3	135 °C
26.6	18.6	MVE 300/15X-51A0	MVE 300/18X-51A0	334	336	22		0.62	0.73	1.32	1.20	3.2	3.4	M20	5	T4	T3	135 °C
56.8	39.4	MVE 700/15X-50A0	MVE 700/18X-50A0	714	712	27		0.62	0.73	1.32	1.20	3.2	3.4	M20	5	T4	T3	135 °C
56.8	39.4	MVE 710/15X-50A0	MVE 710/18X-50A0	714	712	27		0.62	0.73	1.32	1.20	3.2	3.4	M20	5	T4	T3	135 °C
75.6	52.9	MVE 950/15X-50A0	MVE 950/18X-50A0	950	957	33		0.64	0.77	1.40	1.35	4.2	4.2	M20	5	T4	T3	135 °C
88.7	62.0	MVE 1100/15X-50A0	MVE 1100/18X-50A0	1,114	1,122	36		0.64	0.77	1.40	1.35	4.0	4.0	M20	5	T4	T3	135 °C
87.7	61.4	MVE 1100/15X-51A0	MVE 1100/18X-51A0	1,102	1,110	48		0.64	0.77	1.40	1.35	4.0	4.0	M20	5	T4	T3	135 °C
108.6	76.7	MVE 1400/15X-60A0	MVE 1400/18X-60A0	1,364	1,388	63	60	0.70	0.84	1.78	1.78	4.2	4.2	M25	5	T4	T3	135 °C
137.3	92.0	MVE 1700/15X-60A0	MVE 1700/18X-60A0	1,725	1,664	62	59	1.13	1.30	2.16	2.09	4.9	4.7	M25	5	T4	T3	135 °C
187.7	137.4	MVE 2400/15X-60A0	MVE 2400/18X-60A0	2,358	2,485	68	62	1.57	1.88	3.20	3.20	5.1	5.1	M25	5	T4	T3	135 °C
203.5	135.6	MVE 2500/15X-70A0	MVE 2500/18X-70A0	2,557	2,454	80	74	1.76	2.00	3.08	3.00	6.2	6.3	M25	5	T4	T3	135 °C
248.7	169.8	MVE 3000/15X-70A0	MVE 3000/18X-70A0	3,124	3,071	80	74	1.90	2.30	3.68	3.30	6.7	6.8	M25	5	T4	T3	135 °C
306.7	204.7	MVE 3800/15X-75A0	MVE 3800/18X-75A0	3,853	3,704	146		2.20	2.60	4.15	4.15	7.0	7.0	M32	5	T4	T3	135 °C
343.2	240.9	MVE 4300/15X-75A0	MVE 4300/18X-75A0	4,312	4,359	136	125	2.50	3.00	4.50	4.60	7.2	7.4	M32	5	T4	T3	135 °C
437.4	303.7	MVE 5500/15X-80A0	MVE 5500/18X-80A0	5,495	5,495	181	169	2.88	3.45	6.50	5.50	7.3	7.2	M32	5	T4	T3	135 °C
										A max. (Δ)								
576.8	397.3	MVE 7200/15X-85A0	MVE 7200/18X-85A0	7,246	7,188	237	231	4.00	4.80	8.50	8.70	7.0	7.1	M32	5	T4	T3	135 °C
718.0	498.8	MVE 9000/15X-85A0	MVE 9000/18X-85A0	9,020	9,023	252	241	7.35	8.50	13.40	12.00	7.2	7.2	M32	5	T4	T3	135 °C
579.9	406.0	MVE 7200/15X-86A0	MVE 7200/18X-86A0	7,286	7,345	237	231	6.00	6.50	11.00	10.80	4.7	4.5	M32	5	T4	T3	135 °C
724.8	507.0	MVE 9000/15X-86A0	MVE 9000/18X-86A0	9,106	9,172	252	241	6.00	6.50	11.00	10.80	4.7	4.5	M32	5	T4	T3	135 °C
800.1	588.3	MVE 10000/15X-90A0	MVE 10000/18X-90A0	10,052	10,643	300	286	5.40	7.00	13.00	13.00	6.7	6.6	M32	5	T4	T3	135 °C
835.7	581.3	MVE 10000/15X-91A0	MVE 10000/18X-91A0	10,499	10,517	300	286	7.00	8.20	13.10	13.10	7.2	7.7	M32	5	T4	T3	135 °C

SIZE 70A0

SIZE 75A0

SIZE 80A0

UP TO SIZE 60 (NOT INCLUDED)
60Hz masses = 50Hz masses adjusted at 70%
Except for model MVE 1100/15E - 1100/18E

ABOVE SIZE 60 (INCLUDED)
Specific masses for 60Hz

To convert kg into Newton: N = 9.81 · kg

- II 2D Ex tb IIIC Tx Db IP66
- II 2G Ex eb IIC T3 Gb
- Equipment and protective system intended for use in potentially explosive atmospheres (Zone 21 - Zone 1) - Directive 2014/34/UE
- Compliance with Essential Health and Safety Requirements
- IEC 60034-1, IEC EN 60079-0, IEC EN 60079-31, IEC EN 60079-7

Model		Drawing	Size	DIMENSIONAL SPECIFICATIONS (mm)														
				C		M		A	B	Ø G	Holes	D	E	F	H	I	L	N
50Hz	60Hz			50Hz	60Hz	50Hz	60Hz				n°							
MVE 200/15X-30A0	MVE 200/18X-30A0	C	30A0	274		52		Multiple Footprint 80 90 124 135	Multiple Footprint 110 125 110 115	Multiple Footprint 11 13 11 11	4	150	173	15	79	150	166	134
MVE 400/15X-40A0	MVE 400/18X-40A0	D1	40A0	330		78		105	140	13	4	170	196	20	92	174	166	160
MVE 500/15X-40A0	MVE 500/18X-40A0	D1	40A0	330		78		105	140	13	4	170	196	20	92	174	166	160
MVE 300/15X-50A0	MVE 300/18X-50A0	D1	50A0	321		62		120	170	17	4	208	210	22	96	185	192	170
MVE 300/15X-51A0	MVE 300/18X-51A0	D1	51A0	321		62		120	170	17	4	208	220	25	105	202	192	187
MVE 700/15X-50A0	MVE 700/18X-50A0	D1	50A0	391		97		120	170	17	4	208	210	22	96	185	192	170
MVE 710/15X-50A0	MVE 710/18X-50A0	D1	50A0	391		97		120	170	17	4	208	210	22	96	185	192	170
MVE 950/15X-50A0	MVE 950/18X-50A0	D1	50A0	455		129		120	170	17	4	208	210	22	96	185	192	170
MVE 1100/15X-50A0	MVE 1100/18X-50A0	D1	50A0	455		129		120	170	17	4	208	210	22	96	185	192	170
MVE 1100/15X-51A0	MVE 1100/18X-51A0	D1	51A0	414		106		120	170	17	4	208	220	25	105	202	192	187
MVE 1400/15X-60A0	MVE 1400/18X-60A0	D1	60A0	446		112		140	190	17	4	230	260	26	124	240	218	222
MVE 1700/15X-60A0	MVE 1700/18X-60A0	D1	60A0	446		112		140	190	17	4	230	260	26	124	240	218	222
MVE 2400/15X-60A0	MVE 2400/18X-60A0	D1	60A0	490	446	134	112	140	190	17	4	230	260	26	124	240	218	222
MVE 2500/15X-70A0	MVE 2500/18X-70A0	D1	70A0	501		123		155	225	22	4	275	290	30	140	256	250	236
MVE 3000/15X-70A0	MVE 3000/18X-70A0	D1	70A0	535	501	140	123	155	225	22	4	275	290	30	140	256	250	236
MVE 3800/15X-75A0	MVE 3800/18X-75A0	D1	75A0	564	536	151	117	155	255	23.5	4	304	314	30	147	285	277	265
MVE 4300/15X-75A0	MVE 4300/18X-75A0	D1	75A0	584	564	151	141	155	255	23.5	4	304	314	30	147	285	277	265
MVE 5500/15X-80A0	MVE 5500/18X-80A0	E1	80A0	603		143		180	280	26	4	332	360	37	167	345	304	310
MVE 7200/15X-85A0	MVE 7200/18X-85A0	D1	85A0	624		130		200	320	28	4	385	402	40	203	394	360	378
MVE 9000/15X-85A0	MVE 9000/18X-85A0	D1	85A0	624		130		200	320	28	4	385	402	40	203	394	360	378
MVE 7200/15X-86A0	MVE 7200/18X-86A0	D1	86A0	624		130		200	320	28	4	385	402	40	203	394	360	378
MVE 9000/15X-86A0	MVE 9000/18X-86A0	D1	86A0	624		130		200	320	28	4	385	402	40	203	394	360	378
MVE 10000/15X-90A0	MVE 10000/18X-90A0	E1	90A0	728		170		125	380	39	6	452	415	40	205	394	380	378
MVE 10000/15X-91A0	MVE 10000/18X-91A0	E1	91A0	728		170		125	380	39	6	452	415	40	205	394	380	378

Notes:

NOTE: Dimensions with coarse degree of accuracy related to UNI 22768/1

This information is provided without warranty, representation, inducement or licence of any kind. It is accurate to the best OLI knowledge or is obtained from sources believed to be accurate. OLI therefore assumes no legal responsibility.

- Class I, Div.2 Group A, B, C, D T3
- Class II Div.2 Group F, G T4
- Conform to UL 1004-1,UL 1004-3, UL60079-31, UL60079-0, CSA 60079-0, CSA 60079-31, CSA 22.2 N°100, CSA 22.2 N°77, CSA 22.2 N°60079-7

MVE-Exe INCREASED SAFETY

6 POLES - 1000/1200 rpm

Wm (kgcm)		Model		Centrifugal Force (kg)		Weight (kg)		ELECTRICAL SPECIFICATIONS Input Power (kW)		Nominal Current A max. (Y)		Ia / In		Cable Gland	CERTIFICATE Ex e	Class II Div.2	II 2G	II 2D
50Hz	60Hz	50Hz	60Hz	50Hz	60Hz	50Hz	60Hz	50Hz	60Hz	50Hz (400V)	60Hz (460V)	50Hz	60Hz	Metric	tE	Temp. Class	Temp. Class	Temp. Class
9.5	6.6	MVE 50/1X-30A0	MVE 50/12X-30A0	53	53	10		0.12	0.14	0.30	0.40	2.2	2.2	M20	5	T4	T3	100 °C
18.8	13.2	MVE 100/1X-30A0	MVE 100/12X-30A0	105	106	11		0.12	0.14	0.30	0.40	2.2	2.2	M20	5	T4	T3	100 °C
33.5	23.4	MVE 200/1X-40A0	MVE 200/12X-40A0	187	188	19		0.15	0.18	0.65	0.63	2.2	2.2	M20	5	T4	T3	135 °C
56.9	39.9	MVE 300/1X-50A0	MVE 300/12X-50A0	318	320	26		0.25	0.30	0.67	0.64	2.7	2.7	M20	5	T4	T3	135 °C
91.9	64.3	MVE 500/1X-50A0	MVE 500/12X-50A0	513	517	34		0.55	0.40	1.22	1.15	3.0	2.9	M20	5	T4	T3	135 °C
91.9	91.9	MVE 510/1X-50A0	MVE 510/12X-50A0	513	739	34		0.55	0.40	1.20	1.15	3.0	2.9	M20	5	T4	T3	135 °C
137.4	108.6	MVE 800/1X-60A0	MVE 800/12X-60A0	767	873	60	58	0.75	0.80	1.42	1.32	3.4	3.3	M25	5	T4	T3	135 °C
187.7	137.3	MVE 1100/1X-60A0	MVE 1100/12X-60A0	1,048	1,104	78	72	0.75	0.80	1.42	1.32	3.4	3.3	M25	5	T4	T3	135 °C
284.8	196.5	MVE 1500/1X-60A0	MVE 1500/12X-60A0	1,590	1,580	84	73	0.90	1.08	1.80	2.00	3.5	3.5	M25	5	T4	T3	135 °C
299.6	203.5	MVE 1600/1X-70A0	MVE 1600/12X-70A0	1,673	1,636	90	79	0.90	1.08	2.40	2.30	3.9	3.8	M25	5	T4	T3	135 °C
373.1	248.7	MVE 2100/1X-70A0	MVE 2100/12X-70A0	2,083	2,000	105	91	1.50	1.80	3.00	3.20	4.5	4.6	M25	5	T4	T3	135 °C
401.0	275.2	MVE 2200/1X-70A0	MVE 2200/12X-70A0	2,239	2,213	107	93	1.50	1.80	3.00	3.20	4.5	4.6	M25	5	T4	T3	135 °C
467.4	306.7	MVE 2600/1X-75A0	MVE 2600/12X-75A0	2,610	2,466	149	132	1.96	2.10	4.10	4.00	5.0	5.0	M32	5	T4	T3	135 °C
540.3	379.7	MVE 3000/1X-75A0	MVE 3000/12X-75A0	3,017	3,053	155	138	2.20	2.40	4.50	4.30	5.2	5.2	M32	5	T4	T3	135 °C
702.5	465.6	MVE 3700/1X-75A0	MVE 3700/12X-75A0	3,797	3,744	155	142	2.20	2.40	4.50	4.30	5.2	5.2	M32	5	T4	T3	135 °C
680.4	437.4	MVE 3800/1X-80A0	MVE 3800/12X-80A0	3,799	3,517	216	195	2.50	3.00	5.50	5.30	6.1	6.2	M32	5	T4	T3	135 °C
838.3	584.2	MVE 4700/1X-80A0	MVE 4700/12X-80A0	4,681	4,697	220	201	3.20	3.90	6.50	6.95	5.7	5.9	M32	5	T4	T3	135 °C
929.9	654.6	MVE 5200/1X-85A0	MVE 5200/12X-85A0	5,192	5,263	264	248	3.80	4.00	6.92	6.36	5.7	5.7	M32	5	T4	T3	135 °C
1,165.2	824.0	MVE 6500/1X-85A0	MVE 6500/12X-85A0	6,506	6,625	288	265	4.30	5.00	7.76	7.81	6.4	6.2	M32	5	T4	T3	135 °C
										A max. (Δ)								
1,436.0	929.8	MVE 8000/1X-85A0	MVE 8000/12X-85A0	8,018	7,476	309	274	5.50	6.60	12.60	11.60	6.2	6.4	M32	5	T4	T3	135 °C
1,600.4	1,165.2	MVE 9000/1X-85A0	MVE 9000/12X-85A0	8,936	9,369	322	291	6.20	7.45	13.20	12.60	6.5	6.4	M32	5	T4	T3	135 °C
1,434.0	929.8	MVE 8000/1X-86A0	MVE 8000/12X-86A0	8,007	7,476	309	274	4.60	5.50	9.00	10.00	6.0	6.2	M32	5	T4	T3	135 °C
1,598.0	1,165.2	MVE 9000/1X-86A0	MVE 9000/12X-86A0	8,923	9,369	322	291	4.60	5.50	9.00	10.00	6.0	6.2	M32	5	T4	T3	135 °C
1,788.4	1,240.0	MVE 10000/1X-90A0	MVE 10000/12X-90A0	9,986	9,970	374	348	6.10	6.40	14.00	12.70	6.6	6.6	M32	5	T4	T3	135 °C
2,329.8	1,647.4	MVE 13000/1X-90A0	MVE 13000/12X-90A0	13,009	13,246	411	364	7.50	8.30	16.40	16.00	6.4	6.5	M32	5	T4	T3	135 °C
1,802.9	1,240.0	MVE 10000/1X-91A0	MVE 10000/12X-91A0	10,067	9,970	373	348	6.40	7.70	13.00	14.50	6.0	6.0	M32	5	T4	T3	135 °C
2,056.9	1,433.0	MVE 11400/1X-91A0	MVE 11400/12X-91A0	11,485	11,522	404	361	6.40	7.70	13.00	7.50	6.0	6.0	M32	5	T4	T3	135 °C

UP TO SIZE 60 (NOT INCLUDED)
60Hz masses = 50Hz masses adjusted at 70%

ABOVE SIZE 60 (INCLUDED)
Specific masses for 60Hz

To convert kg into Newton: N = 9.81 · kg

- II 2D Ex tb IIIC Tx Db IP66
- II 2G Ex eb IIC T3 Gb
- Equipment and protective system intended for use in potentially explosive atmospheres (Zone 21 - Zone 1) - Directive 2014/34/UE
- Compliance with Essential Health and Safety Requirements
- IEC 60034-1, IEC EN 60079-0, IEC EN 60079-31, IEC EN 60079-7

Model		Drawing	Size	DIMENSIONAL SPECIFICATIONS (mm)														
				C		M		A	B	Ø G	Holes	D	E	F	H	I	L	N
50Hz	60Hz			50Hz	60Hz	50Hz	60Hz				n°							
MVE 50/1X-30A0	MVE 50/12X-30A0	C	30A0	274		52		Multiple Footprint 80 90 124 135	 110 125 110 115	 11 13 11 11	4	150	173	15	79	150	166	134
MVE 100/1X-30A0	MVE 100/12X-30A0	C	30A0	304		67		Multiple Footprint 80 90 124 135	 110 125 110 115	 11 13 11 11	4	150	173	15	79	150	166	134
MVE 200/1X-40A0	MVE 200/12X-40A0	D1	40A0	330		78		105	140	13	4	170	196	20	92	174	166	160
MVE 300/1X-50A0	MVE 300/12X-50A0	D1	50A0	391		97		120	170	17	4	208	210	22	96	185	192	170
MVE 500/1X-50A0	MVE 500/12X-50A0	D1	50A0	455		129		120	170	17	4	208	210	22	96	185	192	170
MVE 510/1X-50A0	MVE 510/12X-50A0	D1	50A0	455		129		120	170	17	4	208	210	22	96	185	192	170
MVE 800/1X-60A0	MVE 800/12X-60A0	D1	60A0	446		112		140	190	17	4	230	260	26	124	240	218	222
MVE 1100/1X-60A0	MVE 1100/12X-60A0	D1	60A0	490	446	134	112	140	190	17	4	230	260	26	124	240	218	222
MVE 1500/1X-60A0	MVE 1500/12X-60A0	D1	60A0	566	490	172	134	140	190	17	4	230	260	26	124	240	218	222
MVE 1600/1X-70A0	MVE 1600/12X-70A0	D1	70A0	563	501	154	123	155	225	22	4	275	290	30	140	256	250	236
MVE 2100/1X-70A0	MVE 2100/12X-70A0	D1	70A0	623	563	184	154	155	225	22	4	275	290	30	140	256	250	236
MVE 2200/1X-70A0	MVE 2200/12X-70A0	D1	70A0	623		184		155	225	22	4	275	290	30	140	256	250	236
MVE 2600/1X-75A0	MVE 2600/12X-75A0	D1	75A0	692	584	205	151	155	255	23.5	4	304	314	30	147	285	277	265
MVE 3000/1X-75A0	MVE 3000/12X-75A0	D1	75A0	692	584	205	151	155	255	23.5	4	304	314	30	147	285	277	265
MVE 3700/1X-75A0	MVE 3700/12X-75A0	D1	75A0	734	692	226	205	155	255	23.5	4	304	314	30	147	285	277	265
MVE 3800/1X-80A0	MVE 3800/12X-80A0	D1	80A0	683	603	183	143	180	280	26	4	332	354	32	170	330	312	311
MVE 4700/1X-80A0	MVE 4700/12X-80A0	D1	80A0	733	683	208	183	180	280	26	4	332	354	32	170	330	312	311
MVE 5200/1X-85A0	MVE 5200/12X-85A0	D1	85A0	704	624	170	130	200	320	28	4	385	402	40	20	394	360	378
MVE 6500/1X-85A0	MVE 6500/12X-85A0	D1	85A0	704		170		200	320	28	4	385	402	40	20	394	360	378
MVE 8000/1X-85A0	MVE 8000/12X-85A0	D1	85A0	774	704	205	170	200	320	28	4	385	402	40	203	394	360	378
MVE 9000/1X-85A0	MVE 9000/12X-85A0	D1	85A0	774	704	205	170	200	320	28	4	385	402	40	203	394	360	378
MVE 8000/1X-86A0	MVE 8000/12X-86A0	D1	86A0	774		205		200	320	28	4	385	402	40	203	394	360	378
MVE 9000/1X-86A0	MVE 9000/12X-86A0	D1	86A0	774		205		200	320	28	4	385	402	40	203	394	360	378
MVE 10000/1X-90A0	MVE 10000/12X-90A0	E1	90A0	908	798	260	205	125	380	39	6	452	415	40	205	394	380	378
MVE 13000/1X-90A0	MVE 13000/12X-90A0	E1	90A0	948	798	280	205	125	380	39	6	452	415	40	205	394	380	378
MVE 10000/1X-91A0	MVE 10000/12X-91A0	E1	91A0	908		260		125	380	39	6	452	415	40	205	394	380	378
MVE 11400/1X-91A0	MVE 11400/12X-91A0	E1	91A0	908		260		125	380	39	6	452	415	40	205	394	380	378

NOTE: Dimensions with coarse degree of accuracy related to UNI 22768/1

This information is provided without warranty, representation, inducement or licence of any kind. It is accurate to the best OLI knowledge or is obtained from sources believed to be accurate. OLI therefore assumes no legal responsibility.

MVE-Exe INCREASED SAFETY

8 POLES - 750/900 rpm

Wm (kgcm)		Model		Centrifugal Force (kg)		Weight (kg)		ELECTRICAL SPECIFICATIONS Input Power (kW)		Nominal Current A max. (Y)		Ia / In		Cable Gland	CERTIFICATE Ex e	Class II Div.2	II 2G	II 2D
50Hz	60Hz	50Hz	60Hz	50Hz	60Hz	50Hz	60Hz	50Hz	60Hz	50Hz (400V)	60Hz (460V)	50Hz	60Hz	Metric	tE	Temp. Class	Temp. Class	Temp. Class
33.4		MVE 150/075X-40A0	MVE 150/090X-40A0	105	151	21		0.23	0.25	1.14	1.14	1.7	1.7	M20	5	T4	T3	135 °C
56.9		MVE 250/075X-50A0	MVE 250/090X-50A0	179	257	29		0.25	0.30	0.90	0.89	1.9	1.9	M20	5	T4	T3	135 °C
84.0		MVE 400/075X-50A0	MVE 400/090X-50A0	264	380	34		0.25	0.30	0.90	0.89	2.1	2.1	M20	5	T4	T3	135 °C
137.3		MVE 650/075X-60A0	MVE 650/090X-60A0	431	621	63		0.37	0.45	1.20	1.20	2.4	2.4	M25	5	T4	T3	135 °C
187.7		MVE 900/075X-60A0	MVE 900/090X-60A0	589	849	70		0.55	0.54	1.23	1.29	2.7	2.7	M25	5	T4	T3	135 °C
299.6		MVE 1300/075X-70A0	MVE 1300/090X-70A0	941	1,355	90		0.75	0.90	2.20	2.20	3.2	3.2	M25	5	T4	T3	135 °C
467.4		MVE 2100/075X-75A0	MVE 2100/090X-75A0	1,468	2,114	150		1.00	1.20	2.81	2.89	4.4	4.3	M32	5	T4	T3	135 °C
680.3		MVE 3100/075X-80A0	MVE 3100/090X-80A0	2,137	3,077	201		2.00	2.30	4.50	4.40	4.2	4.2	M32	5	T4	T3	135 °C
838.4		MVE 3800/075X-80A0	MVE 3800/090X-80A0	2,633	3,792	219		2.50	3.00	6.00	6.00	4.1	4.2	M32	5	T4	T3	135 °C
929.7		MVE 4200/075X-85A0	MVE 4200/090X-85A0	2,920	4,205	268		2.90	3.40	6.50	6.50	4.0	3.9	M32	5	T4	T3	135 °C
1,165.2		MVE 5300/075X-85A0	MVE 5300/090X-85A0	3,660	5,270	289		3.70	4.30	8.00	8.20	4.0	4.4	M32	5	T4	T3	135 °C
1,435.9		MVE 6500/075X-85A0	MVE 6500/090X-85A0	4,510	6,494	308		3.80	4.20	8.78	8.30	3.8	4.2	M32	5	T4	T3	135 °C
										A max. (Δ)								
2,200.4		MVE 10000/075X-90A0	MVE 10000/090X-90A0	6,911	9,952	422		6.80	7.50	13.50	12.50	3.7	4.4	M32	5	T4	T3	135 °C
2,311.0		MVE 10000/075X-91A0	MVE 10000/090X-91A0	7,258	10,452	422		6.00	7.00	14.40	14.00	4.7	4.7	M32	5	T4	T3	135 °C

SIZE 80A0

SIZE 86A0

SIZE 91A0

60Hz masses = 50Hz masses adjusted at 100%

To convert kg into Newton: N = 9.81 · kg

- II 2D Ex tb IIIC Tx Db IP66
- II 2G Ex eb IIC T3 Gb
- Equipment and protective system intended for use in potentially explosive atmospheres (Zone 21 - Zone 1) - Directive 2014/34/UE
- Compliance with Essential Health and Safety Requirements
- IEC 60034-1, IEC EN 60079-0, IEC EN 60079-31, IEC EN 60079-7

Model		Drawing	Size	DIMENSIONAL SPECIFICATIONS (mm)												
				C	M	A	B	Ø G	Holes	D	E	F	H	I	L	N
50Hz	60Hz			50Hz-60Hz	50Hz-60Hz				n°							
MVE 150/075X-40A0	MVE 150/090X-40A0	D1	40A0	330	78	105	140	13	4	170	196	20	92	174	166	160
MVE 250/075X-50A0	MVE 250/090X-50A0	D1	50A0	391	97	120	170	17	4	208	210	22	96	185	192	170
MVE 400/075X-50A0	MVE 400/090X-50A0	D1	50A0	455	129	120	170	17	4	208	210	22	96	185	192	170
MVE 650/075X-60A0	MVE 650/090X-60A0	D1	60A0	446	112	140	190	17	4	230	260	26	124	240	218	222
MVE 900/075X-60A0	MVE 900/090X-60A0	D1	60A0	490	134	140	190	17	4	230	260	26	124	240	218	222
MVE 1300/075X-70A0	MVE 1300/090X-70A0	D1	70A0	563	154	155	225	22	4	275	290	30	140	256	250	236
MVE 2100/075X-75A0	MVE 2100/090X-75A0	D1	75A0	692	205	155	255	23.5	4	304	314	30	147	285	277	265
MVE 3100/075X-80A0	MVE 3100/090X-80A0	D1	80A0	683	183	180	280	26	4	332	354	32	170	330	312	311
MVE 3800/075X-80A0	MVE 3800/090X-80A0	D1	80A0	733	208	180	280	26	4	332	354	32	170	330	312	311
MVE 4200/075X-85A0	MVE 4200/090X-85A0	D1	85A0	704	170	200	320	28	4	385	402	40	203	394	360	378
MVE 5300/075X-85A0	MVE 5300/090X-85A0	D1	85A0	704	170	200	320	28	4	385	402	40	203	394	360	378
MVE 6500/075X-85A0	MVE 6500/090X-85A0	D1	85A0	774	205	200	320	28	4	385	402	40	203	394	360	378
MVE 10000/075X-90A0	MVE 10000/090X-90A0	E1	90A0	948	280	125	380	39	6	452	415	40	205	394	380	378
MVE 10000/075X-91A0	MVE 10000/090X-91A0	E1	91A0	948	280	125	380	39	6	452	415	40	205	394	380	378

Notes:

NOTE: Dimensions with coarse degree of accuracy related to UNI 22768/1

This information is provided without warranty, representation, inducement or licence of any kind. It is accurate to the best OLI knowledge or is obtained from sources believed to be accurate. OLI therefore assumes no legal responsibility.

MVE-Exd EXPLOSION-PROOF

2 POLES - 3000/3600 rpm

Wm (kgcm)		Model		Centrifugal Force (kg)		Weight (kg)		ELECTRICAL SPECIFICATIONS						
								Input Power (kW)		Nominal Current **A max. (Y)**		Ia / In		Cable Gland
50Hz	60Hz	50Hz	60Hz	50Hz	60Hz	50Hz	60Hz	50Hz	60Hz	50Hz (400V)	60Hz (460V)	50Hz	60Hz	Metric
15.7	11.1	MVE 800/3D-50A0	MVE 800/36D-50A0	794	800	40		0.75	0.90	1.45	1.50	3.8	3.8	3/4" NPT 110 °C
26.6	18.6	MVE 1300/3D-50A0	MVE 1300/36D-50A0	1,355	1,365	41		1.10	1.10	2.00	2.75	5.2	5.0	3/4" NPT 110 °C
31.3	22.2	MVE 1600/3D-60A0	MVE 1600/36D-60A0	1,601	1,608	63	62	1.57	1.60	2.94	2.61	5.9	6.2	3/4" NPT 110 °C
36.8	27.6	MVE 2000/3D-60A0	MVE 2000/36D-60A0	2,027	1,997	64	63	1.25	1.40	3.20	2.80	6.5	6.4	3/4" NPT 110 °C
46.0	31.9	MVE 2300/3D-60A0	MVE 2300/36D-60A0	2,302	2,306	65	63	1.25	1.40	3.20	2.80	6.0	6.3	3/4" NPT 110 °C
68.1	43.9	MVE 3200/3D-75A0	MVE 3200/36D-75A0	3,252	3,176	105	103	3.00	3.00	5.20	4.60	8.3	8.2	3/4" NPT 110 °C
79.4	56.0	MVE 4000/3D-75A0	MVE 4000/36D-75A0	4,033	4,052	108	104	3.00	3.00	5.20	4.60	8.5	9.7	3/4" NPT 110 °C

4 POLES - 1500/1800 rpm

Wm (kgcm)		Model		Centrifugal Force (kg)		Weight (kg)		ELECTRICAL SPECIFICATIONS						
								Input Power (kW)		Nominal Current **A max. (Y)**		Ia/In		Cable Gland
50Hz	60Hz	50Hz	60Hz	50Hz	60Hz	50Hz	60Hz	50Hz	60Hz	50Hz (400V)	60Hz (460V)	50Hz	60Hz	Metric
56.8	39.4	MVE 700/15D-50A0	MVE 700/18D-50A0	714	712	45		0.55	0.66	1.00	1.00	3.0	3.2	3/4" NPT 110 °C
88.7	56.8	MVE 1100/15D-50A0	MVE 1100/18D-50A0	1,114	1,028	52	45	0.60	0.68	1.27	1.50	3.8	3.8	3/4" NPT 110 °C
108.6	76.7	MVE 1400/15D-60A0	MVE 1400/18D-60A0	1,364	1,388	73	70	0.75	1.00	1.67	1.80	4.0	4.0	3/4" NPT 110 °C
137.3	92.0	MVE 1700/15D-60A0	MVE 1700/18D-60A0	1,725	1,664	76	61	1.00	1.20	1.95	2.00	4.7	4.5	3/4" NPT 110 °C
187.7	137.4	MVE 2400/15D-60A0	MVE 2400/18D-60A0	2,358	2,485	78	72	1.25	1.40	2.80	2.70	4.9	4.9	3/4" NPT 110 °C
203.5	135.6	MVE 2500/15D-70A0	MVE 2500/18D-70A0	2,557	2,454	99	93	1.50	1.60	2.70	2.60	6.0	6.1	3/4" NPT110 °C
248.7	169.8	MVE 3000/15D-70A0	MVE 3000/18D-70A0	3,124	3,071	105	97	1.65	1.90	2.80	2.70	6.5	6.6	3/4" NPT 110 °C
306.7	204.7	MVE 3800/15D-75A0	MVE 3800/18D-75A0	3,853	3,704	136	125	2.30	2.25	4.10	3.96	6.8	6.8	3/4" NPT 110 °C
193.0	193.0	MVE 3811/15D-75A0	MVE 3811/18D-75A0	2,425	3,492	136	125	2.30	2.25	4.10	3.96	6.8	6.8	3/4" NPT 110 °C
343.2	240.9	MVE 4300/15D-75A0	MVE 4300/18D-75A0	4,312	4,359	140	130	2.40	2.60	4.30	4.10	7.0	7.2	3/4" NPT 110 °C
437.4	303.7	MVE 5500/15D-80A0	MVE 5500/18D-80A0	5,495	5,495	193	183	3.10	3.10	5.70	5.30	7.1	7.0	3/4" NPT 110 °C

SIZE 50A0

UP TO SIZE 50 (INCLUDED)
60Hz masses = 50Hz masses adjusted at 70%
Except for model MVE 1100/15D - 1100/18D

ABOVE SIZE 50 (NOT INCLUDED)
Specific masses for 60Hz

To convert kg into Newton: N = 9.81 · kg

» II 2G Ex db IIB T3
» Compliance with Essential Health and Safety Requirements
» IEC EN 60079-0, IEC EN 60079-31, IEC EN 60079-1

X

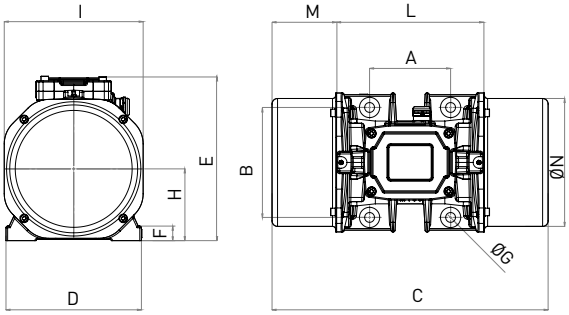

Y

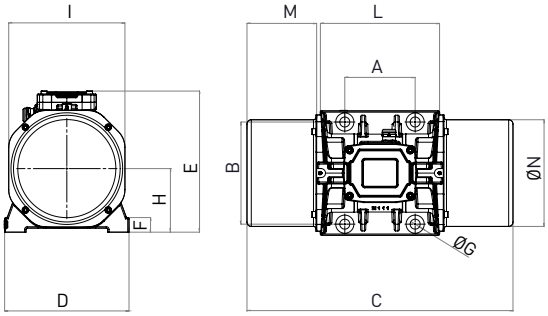

Model		Drawing	Size	DIMENSIONAL SPECIFICATIONS (mm)															
				C		M		A	B	Ø G	Holes	D	E	F	H	I	L	N
50Hz	60Hz			50Hz	60Hz	50Hz	60Hz				n°							
MVE 800/3D-50A0	MVE 800/36D-50A0	X	50A0	332		63		120	170	17	4	209	251	27	103	185	205	165
MVE 1300/3D-50A0	MVE 1300/36D-50A0	X	50A0	332		63		120	170	17	4	209	251	27	103	185	205	165
MVE 1600/3D-60A0	MVE 1600/36D-60A0	X	60A0	477		111		140	190	17	4	234	283	25	124	240	254	221
MVE 2000/3D-60A0	MVE 2000/36D-60A0	X	60A0	477		111		140	190	17	4	234	283	25	124	240	254	221
MVE 2300/3D-60A0	MVE 2300/36D-60A0	X	60A0	477		111		140	190	17	4	234	283	25	124	240	254	221
MVE 3200/3D-75A0	MVE 3200/36D-75A0	Y	75A0	540		118		155	255	23.5	4	302	330	30	150	280	304	265
MVE 4000/3D-75A0	MVE 4000/36D-75A0	Y	75A0	554		125		155	255	23.5	4	302	330	30	150	280	304	265

Model		Drawing	Size	DIMENSIONAL SPECIFICATIONS (mm)															
				C		M		A	B	Ø G	Holes	D	E	F	H	I	L	N
50Hz	60Hz			50Hz	60Hz	50Hz	60Hz				n°							
MVE 700/15D-50A0	MVE 700/18D-50A0	X	50A0	396		95		120	170	17	4	209	251	27	103	185	205	165
MVE 1100/15D-50A0	MVE 1100/18D-50A0	X	50A0	466	396	130	95	120	170	17	4	209	251	27	103	185	205	165
MVE 1400/15D-60A0	MVE 1400/18D-60A0	X	60A0	477		111		140	190	17	4	234	283	25	124	240	254	221
MVE 1700/15D-60A0	MVE 1700/18D-60A0	X	60A0	477		111		140	190	17	4	234	283	25	124	240	254	221
MVE 2400/15D-60A0	MVE 2400/18D-60A0	X	60A0	521		133		140	190	17	4	234	283	25	124	240	254	221
MVE 2500/15D-70A0	MVE 2500/18D-70A0	Y	70A0	525		123		155	225	22	4	274	311	32	140	256	279	235
MVE 3000/15D-70A0	MVE 3000/18D-70A0	Y	70A0	586		153		155	225	22	4	274	311	32	140	256	279	235
MVE 3800/15D-75A0	MVE 3800/18D-75A0	Y	75A0	596		146		155	255	23.5	4	302	330	30	150	280	304	265
MVE 3811/15D-75A0	MVE 3811/18D-75A0	Y	75A0	596		146		155	255	23.5	4	302	330	30	150	280	304	265
MVE 4300/15D-75A0	MVE 4300/18D-75A0	Y	75A0	616		156		155	255	23.5	4	302	330	30	150	280	304	265
MVE 5500/15D-80A0	MVE 5500/18D-80A0	Y	80A0	612		127		180	280	26	4	330	379	33	176	330	358	310

Notes:

NOTE: Dimensions with coarse degree of accuracy related to UNI 22768/1

This information is provided without warranty, representation, inducement or licence of any kind. It is accurate to the best OLI knowledge or is obtained from sources believed to be accurate. OLI therefore assumes no legal responsibility.

» Class I, Div.1 Group C, D T3 IP66
» Conform to UL 1004-1, UL 674, CSA 22.2 60079-0, CSA 22.2 60079-31, CSA 22.2 100, , CSA 22.2 60079-1

MVE-Exd EXPLOSION-PROOF

6 POLES - 1000/1200 rpm

Wm (kgcm)		Model		Centrifugal Force (kg)		Weight (kg)		ELECTRICAL SPECIFICATIONS						
								Input Power (kW)		Nominal Current **A max. (Y)**		Ia/In		Cable Gland
50Hz	60Hz	50Hz	60Hz	50Hz	60Hz	50Hz	60Hz	50Hz	60Hz	50Hz (400V)	60Hz (460V)	50Hz	60Hz	Metric
91.9		MVE 500/1D-50A0	MVE 500/12D-50A0	513	739	54		0.30	0.32	1.10	1.05	2.8	2.7	3/4" NPT 110 °C
137.4	108.6	MVE 800/1D-60A0	MVE 800/12D-60A0	767	873	73	71	0.57	0.68	1.14	1.21	3.2	3.1	3/4" NPT 110 °C
187.7	137.3	MVE 1100/1D-60A0	MVE 1100/12D-60A0	1,048	1,104	80	74	0.56	0.58	1.40	1.30	3.2	3.1	3/4" NPT 110 °C
284.8	196.5	MVE 1500/1D-60A0	MVE 1500/12D-60A0	1,590	1,580	94	83	0.80	0.90	1.60	1.70	3.3	3.3	3/4" NPT 110 °C
299.6	203.5	MVE 1600/1D-70A0	MVE 1600/12D-70A0	1,673	1,636	109	99	1.00	1.13	2.50	2.72	3.7	3.6	3/4" NPT110 °C
373.1	248.7	MVE 2100/1D-70A0	MVE 2100/12D-70A0	2,083	2,000	121	107	1.20	1.35	2.80	3.00	4.3	4.4	3/4" NPT 110 °C
467.4	306.7	MVE 2600/1D-75A0	MVE 2600/12D-75A0	2,610	2,466	153	136	1.50	1.60	3.50	3.30	4.8	4.8	3/4" NPT 110 °C
540.3	379.7	MVE 3000/1D-75A0	MVE 3000/12D-75A0	3,017	3,053	161	135	1.75	1.90	4.30	4.00	5.0	5.0	3/4" NPT 110 °C
680.4	437.4	MVE 3800/1D-80A0	MVE 3800/12D-80A0	3,799	3,517	215	196	2.10	2.30	5.00	4.80	5.9	6.0	3/4" NPT110 °C
838.3	584.2	MVE 4700/1D-80A0	MVE 4700/12D-80A0	4,681	4,697	231	212	2.50	2.80	6.20	6.00	5.5	5.7	3/4" NPT 110 °C

8 POLES - 750/900 rpm

Wm (kgcm)		Model		Centrifugal Force (kg)		Weight (kg)	ELECTRICAL SPECIFICATIONS						
							Input Power (kW)		Nominal Current **A max. (Y)**		Ia/In		Cable Gland
50Hz	60Hz	50Hz	60Hz	50Hz	60Hz	50Hz-60Hz	50Hz	60Hz	50Hz (400V)	60Hz (460V)	50Hz	60Hz	Metric
56.9		MVE 250/075D-50A0	MVE 250/090D-50A0	179	257	47	0.35	0.38	1.15	1.15	1.7	1.7	3/4" NPT 110 °C
84.0		MVE 400/075D-50A0	MVE 400/090D-50A0	264	380	54	0.35	0.38	1.15	1.15	1.9	1.9	3/4" NPT 110 °C
137.3		MVE 650/075D-60A0	MVE 650/090D-60A0	431	621	73	0.43	0.50	1.12	1.10	2.2	2.2	3/4" NPT 110 °C
187.7		MVE 900/075D-60A0	MVE 900/090D-60A0	589	849	82	0.55	0.60	1.40	1.20	2.5	2.5	3/4" NPT 110 °C
299.6		MVE 1300/075D-70A0	MVE 1300/090D-70A0	941	1,355	109	0.80	0.80	2.20	2.10	3.0	3.0	3/4" NPT 110 °C
467.4		MVE 2100/075D-75A0	MVE 2100/090D-75A0	1,468	2,114	153	1.25	1.30	3.20	2.80	4.2	4.1	3/4" NPT 110 °C
680.3		MVE 3100/075D-80A0	MVE 3100/090D-80A0	2,137	3,077	214	1.50	1.80	3.80	3.80	4.0	4.0	3/4"NPT110 °C
838.4		MVE 3800/075D-80A0	MVE 3800/090D-80A0	2,633	3,792	230	2.50	3.20	5.50	5.70	3.9	4.0	3/4" NPT 110 °C

SIZE 60A0

To convert kg into Newton: N = 9.81 · kg

» II 2G Ex db IIB T3
» Compliance with Essential Health and Safety Requirements
» IEC EN 60079-0, IEC EN 60079-31, IEC EN 60079-1

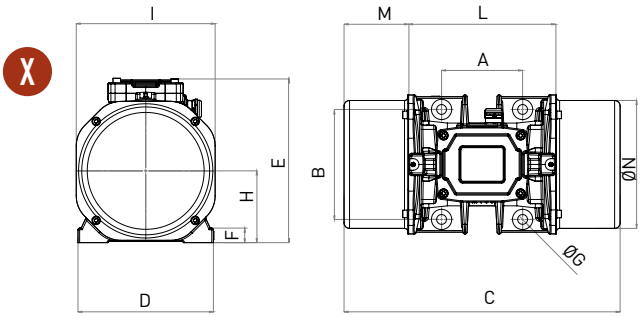

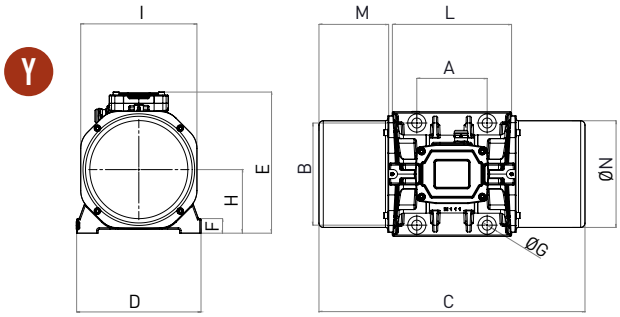

Model		Drawing	Size	DIMENSIONAL SPECIFICATIONS (mm)														
				C		M		A	B	Ø G	Holes	D	E	F	H	I	L	N
50Hz	60Hz			50Hz	60Hz	50Hz	60Hz				n°							
MVE 500/1D-50A0	MVE 500/12D-50A0	X	50A0	466		130		120	170	17	4	209	251	27	103	185	205	165
MVE 800/1D-60A0	MVE 800/12D-60A0	X	60A0	477		111		140	190	17	4	234	283	25	124	240	254	221
MVE 1100/1D-60A0	MVE 1100/12D-60A0	X	60A0	521		133		140	190	17	4	234	283	25	124	240	254	221
MVE 1500/1D-60A0	MVE 1500/12D-60A0	X	60A0	597		171		140	190	17	4	234	283	25	124	240	254	221
MVE 1600/1D-70A0	MVE 1600/12D-70A0	Y	70A0	586		153		155	225	22	4	274	311	32	140	256	279	235
MVE 2100/1D-70A0	MVE 2100/12D-70A0	Y	70A0	646		183		155	225	22	4	274	311	32	140	256	279	235
MVE 2600/1D-75A0	MVE 2600/12D-75A0	Y	75A0	724		210		155	255	23.5	4	302	330	30	150	280	304	264
MVE 3000/1D-75A0	MVE 3000/12D-75A0	Y	75A0	724		210		155	255	23.5	4	302	330	30	150	280	304	264
MVE 3800/1D-80A0	MVE 3800/12D-80A0	Y	80A0	692		167		180	280	26	4	330	379	33	176	330	358	310
MVE 4700/1D-80A0	MVE 4700/12D-80A0	Y	80A0	744		193		180	280	26	4	330	379	33	176	330	358	310

Model		Drawing	Size	DIMENSIONAL SPECIFICATIONS (mm)												
				C	M	A	B	Ø G	Holes	D	E	F	H	I	L	N
50Hz	60Hz			50Hz-60Hz	50Hz-60Hz				n°							
MVE 250/075D-50A0	MVE 250/090D-50A0	X	50A0	396	95	120	170	17	4	209	251	27	103	185	205	165
MVE 400/075D-50A0	MVE 400/090D-50A0	X	50A0	466	130	120	170	17	4	209	251	27	103	185	205	165
MVE 650/075D-60A0	MVE 650/090D-60A0	X	60A0	477	111	140	190	17	4	234	283	25	124	240	254	221
MVE 900/075D-60A0	MVE 900/090D-60A0	X	60A0	521	133	140	190	17	4	234	283	25	124	240	254	221
MVE 1300/075D-70A0	MVE 1300/090D-70A0	Y	70A0	586	153	155	225	22	4	274	311	32	140	256	279	235
MVE 2100/075D-75A0	MVE 2100/090D-75A0	Y	75A0	724	210	155	255	23.5	4	302	330	30	150	280	304	264
MVE 3100/075D-80A0	MVE 3100/090D-80A0	Y	80A0	692	167	180	280	26	4	330	379	33	176	330	358	310
MVE 3800/075D-80A0	MVE 3800/090D-80A0	Y	80A0	744	193	180	280	26	4	330	379	33	176	330	358	310

Notes:

NOTE: Dimensions with coarse degree of accuracy related to UNI 22768/1

This information is provided without warranty, representation, inducement or licence of any kind. It is accurate to the best OLI knowledge or is obtained from sources believed to be accurate. OLI therefore assumes no legal responsibility.

» Class I, Div.1 Group C, D T3 IP66
» Conform to UL 1004-1, UL 674, CSA 22.2 60079-0, CSA 22.2 60079-31, CSA 22.2 100, , CSA 22.2 60079-1

MVE-MILLING

8 POLES - 750 rpm

Wm (kgcm)		Model		Centrifugal Force (kg)		Weight (kg)		ELECTRICAL SPECIFICATIONS							CERTIFICATE
								Input Power (kW)		Nominal Current **A max. (Y)**		Ia / In		Cable Gland	II3D
50Hz	60Hz	50Hz	60Hz	50Hz	60Hz	50Hz	60Hz	50Hz	60Hz	50Hz (400V)	60Hz (460V)	50Hz	60Hz	Metric	Temp. Class
383.2	-	MVE 1200/075	NA	1,203	-	94		0.65	-	1.30	-	2.5	-	M25	135 °C
471.2	-	MVE 1400/075	NA	1,480	-	104		0.65	-	1.50	-	2.5	-	M25	135 °C

10 POLES - 600/720 rpm

Wm (kgcm)		Model		Centrifugal Force (kg)		Weight (kg)		ELECTRICAL SPECIFICATIONS							CERTIFICATE
								Input Power (kW)		Nominal Current **A max. (Δ)**		Ia / In		Cable Gland	II3D
50Hz	60Hz	50Hz	60Hz	50Hz	60Hz	50Hz	60Hz	50Hz	60Hz	50Hz (400V)	60Hz (460V)	50Hz	60Hz	Metric	Temp. Class
383.2		MVE 1200/060	MVE 1200/072	770	1,110	94		0.78	0.78	1.40	1.30	1.5	1.5	M25	100 °C
471.2		MVE 1400/060	MVE 1400/072	947	1,364	104		0.78	0.78	1.40	1.30	1.5	1.5	M25	100 °C

SIZE 60 - MILLING

60Hz masses = 50Hz masses adjusted at 100%

To convert kg into Newton: N = 9.81 · kg

- II3D Ex tc IIIC Tx IP66
- Equipment and protective system intended for use in potentially explosive atmospheres (Zone 22) - Directive 2014/34/UE
- Compliance with Essential Health and Safety Requirements
- IEC 60079-10-2

L

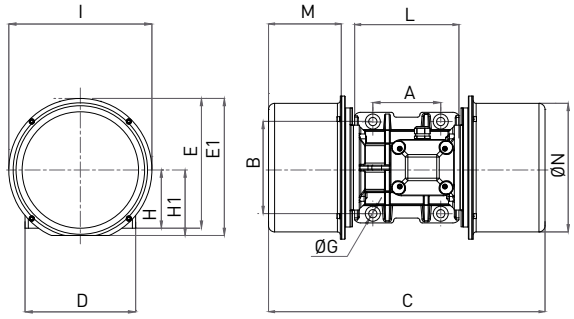

Model		Drawing	Size	DIMENSIONAL SPECIFICATIONS (mm)																
				C		M		A	B	Ø G	Holes	D	E	E1	F	H	H1	I	L	N
50Hz	60Hz			50Hz	60Hz	50Hz	60Hz				N°									
MVE 1200/075	NA	L	60	570		150		140	190	17	4	228	268	283	23	120	135	295	220	265
MVE 1400/075	NA	L	60	570		140		140	190	17	4	228	268	283	23	120	135	295	220	265

Model		Drawing	Size	DIMENSIONAL SPECIFICATIONS (mm)																
				C		M		A	B	Ø G	Holes	D	E	E1	F	H	H1	I	L	N
50Hz	60Hz			50Hz	60Hz	50Hz	60Hz				N°									
MVE 1200/060	MVE 1200/072	L	60	570		150		140	190	17	4	228	268	283	23	135	135	295	220	265
MVE 1400/060	MVE 1400/072	L	60	570		150		140	190	17	4	228	268	283	23	135	135	295	220	265

Notes:

NOTE: Dimensions with coarse degree of accuracy related to UNI 22768/1

This information is provided without warranty, representation, inducement or licence of any kind. It is accurate to the best OLI knowledge or is obtained from sources believed to be accurate. OLI therefore assumes no legal responsibility.

» Declaration of conformity "type B" according to:
2014/35/UE - 2006/42/EC - EN 60034-1

INSTALLATION

Mounting

The base plate surface where the vibrator motor is mounted has an allowable tolerance of 0.25mm (0.01in), so that the surfaces rest uniformly against each other to avoid internal tension that may cause breakage of the foot of the vibrator motor.
Use 8.8 type bolts, 8.0 type nuts and flat washers belonging to category A EN ISO 7089 / 7092.

The graph below shows the correct torque settings for the different bolt sizes used on the motor vibrators.

Motor / Machine interface

Screw		Washer		Clamping torque	
Metric	Imperial	Metric UNI 6592	Imperial Flat washer	(Nm)	(ftlb)
M6	1/4"	6.4 x 12	1/4"	9	6.5
M8	5/16"	8.4 x 16	5/16"	23	16.5
M10	3/8"	10.5 x 20	3/8"	45	33
M12	1/2"	13 x 24	1/2"	80	58
M16	5/8"	17 x 30	5/8"	185	137
M20	13/16"	21 x 37	13/16"	373	275
M22	7/8"	23 x 39	7/8"	550	411
M24	15/16"	25 x 44	15/16"	696	513
M27	1"	28 x 50	1"	873	645
M36	1-3/8"	37 x 66	1-3/8"	1,864	1,370
M42	1 5/8"	37 x 66	1 5/8"	2,850	2,102

FIXING

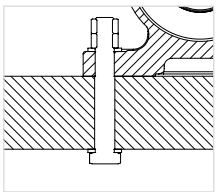

Smooth through borehole
+ screw
+ flat washer
+ nut and counternut

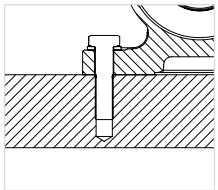

Tapped threaded borehole
+ screw
+ flat washer

SURFACE FLATNESS TOLERANCE

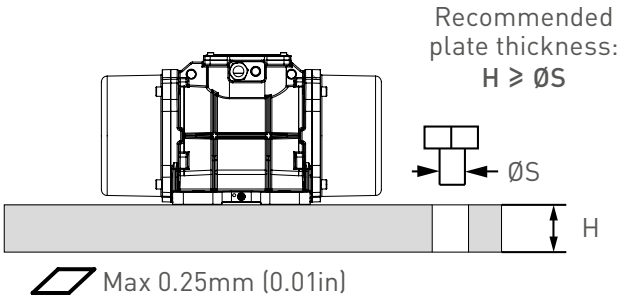

MACHINED & NOT PAINTED SUPPORT PLATE

Electrical connection

Verify that the voltage and frequency supply match the ones indicated on the rating plate of the electric vibrator.
If the motor is operated via a variable frequency drive do not run it under 20 Hz and not over the rated frequency.
Insert the power cable through the cable gland. The lead-in wires have to be of the eyelet-type, pre-insulated, with a bore that suits the terminals of the junction box in order to prevent overheating of the wire. Use only conductors that have a suitable cross-section.

Connect the lead wires to the pins (as shown in the diagram below) and tighten them with the specified torque.

Do not forget to fix the earthing cable to the provided studs → Compulsory connection!

Before closing the junction box make sure that the cover gasket is properly fitted in order to keep the specified IP protection.
For more details on motor installation refer to product manuals.

Junction box nuts tightening torque		
Screw	Nm	ftlb
M4	2.5	1.84
M5	4	2.95
M6	5	3.69
M8	6	4.43
M10	8	5.90

TERMINAL CONNECTIONS

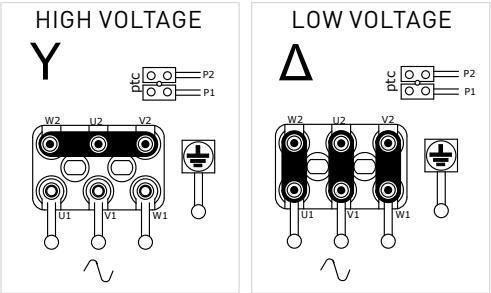

Check "Nominal Current" column label to know the factory preset connection of each motor.

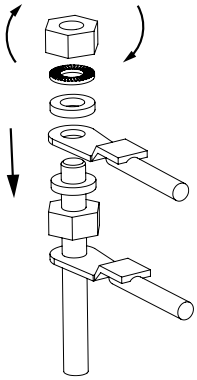

Overload protection

All electric vibrators MUST be connected to a suitable external overload protection.
When using two electric vibrators in sync, each of them has to be connected to an external overload protection that must be interlocked to make sure both motors are stopped if one fails.
Always use a thermal-magnetic type motor protection, with delayed cut-off, to avoid stopping the motor during start-up when the current draw is higher than the rated running current for a few seconds.
Cut-off of the overload protection should be set at a maximum of +10% of the rated current.

HOW TO CHANGE THE VIBRATION INTENSITY

Adjustable masses – Type A

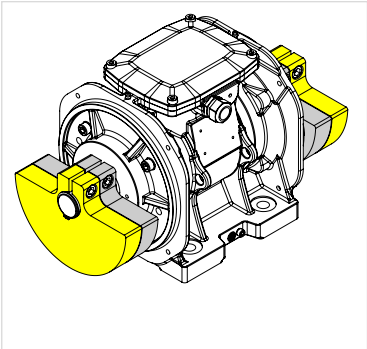

MASSES AT 100%

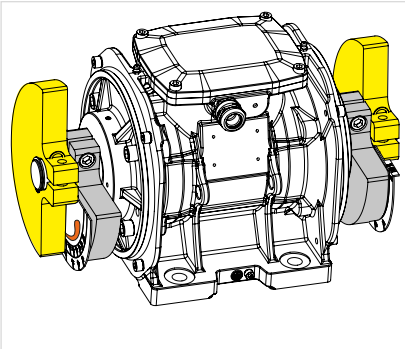

ADJUSTED MASSES

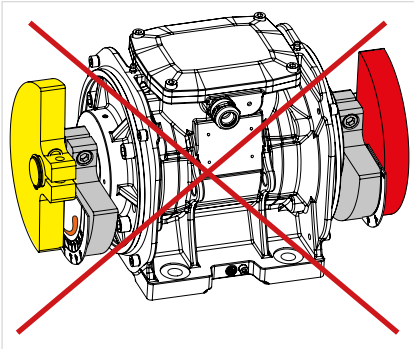

INCORRECTLY ADJUSTED MASSES

2 TIPS TO CORRECTLY ADJUST MASSES:

Rotate the mass following the design on the plate: from the thicker tip towards the thin tip.

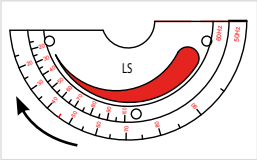

left side of the motor. for sizes up to 60

Rotate the masses in the opposite direction to the cable gland.

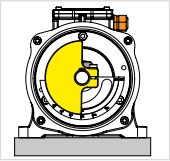

left side

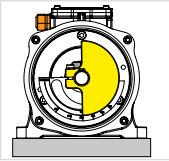

right side

Adjustable masses – Type B

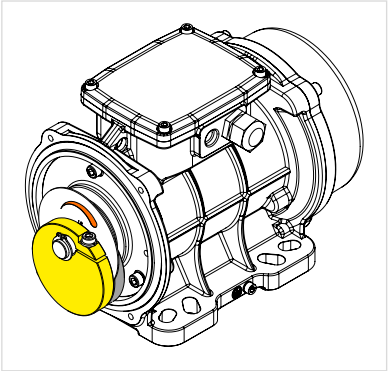

MASSES AT 100%

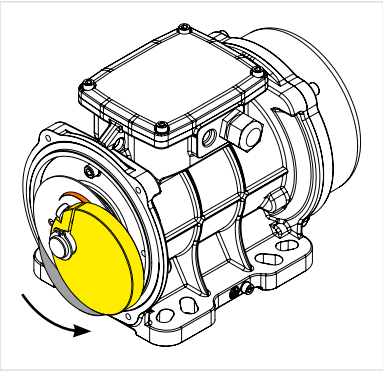

ADJUSTED MASSES

The fissure in the mass indicates the degree of adjustment.

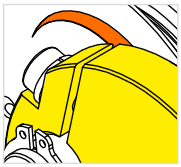

Rotate the mass following the design on the plate: from the thicker tip towards the thin tip.

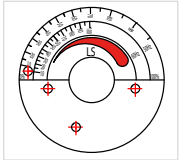

Adjustable masses – Type C (blade masses)

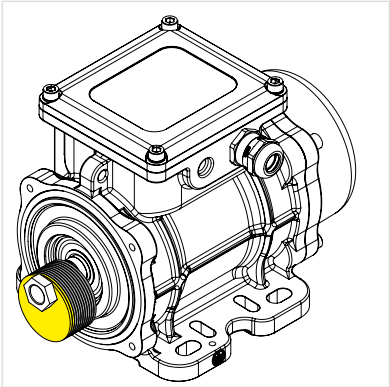

MASSES AT 100%

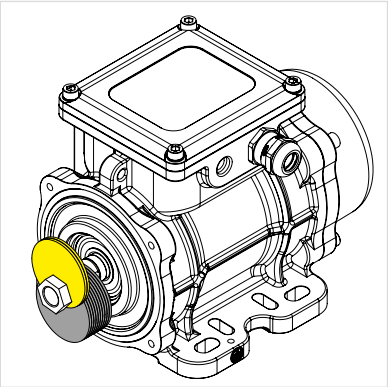

ADJUSTED MASSES

For technical information on the regulation of blade masses refer to the Use and Maintenance Manual.

Warning:
DO NOT grease new motors before installation.

OLI motors with roller bearings leave the factory filled with the right quantity of grease while those with ball bearing do not need any lubrication.

A

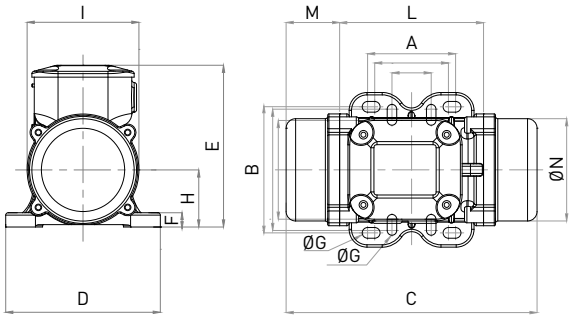

A1

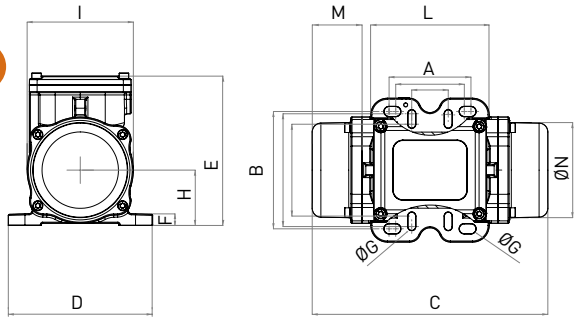

B

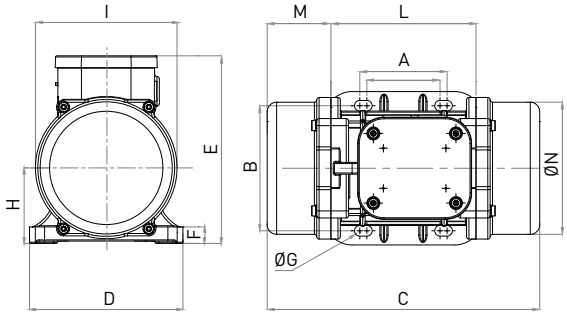

B1

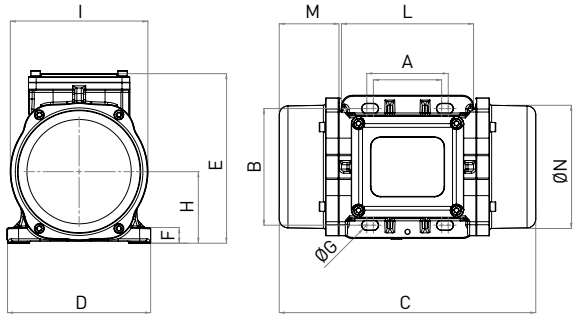

C

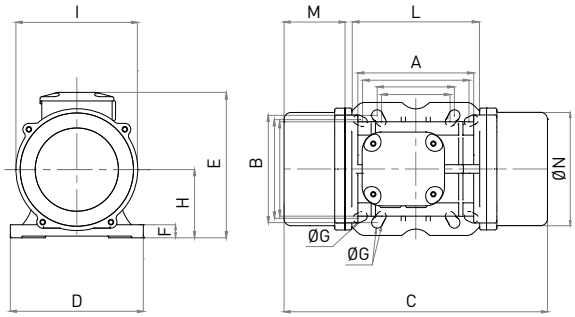

C1

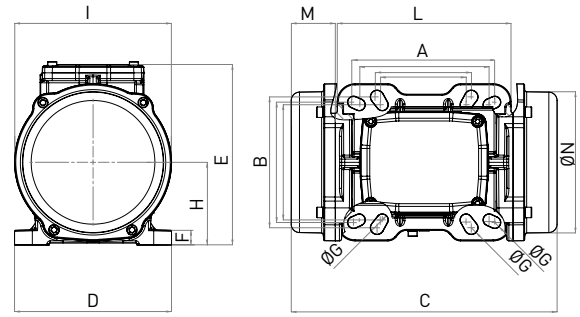

D1

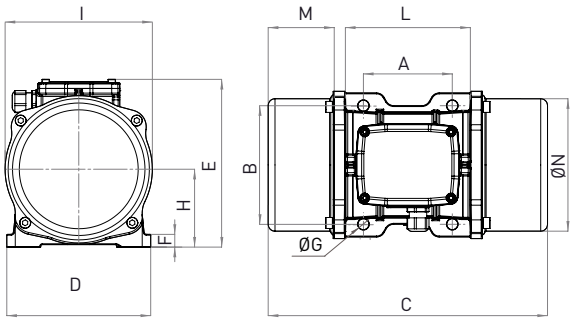

E1

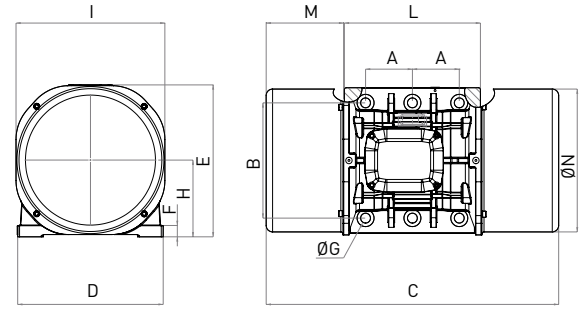

E

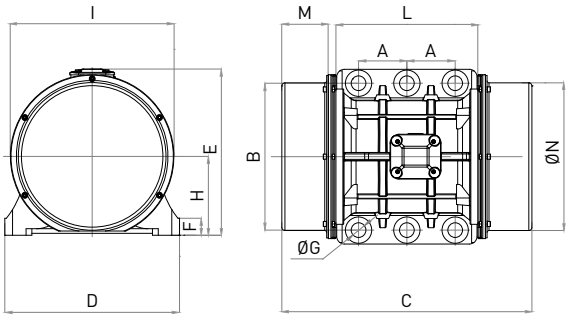

G

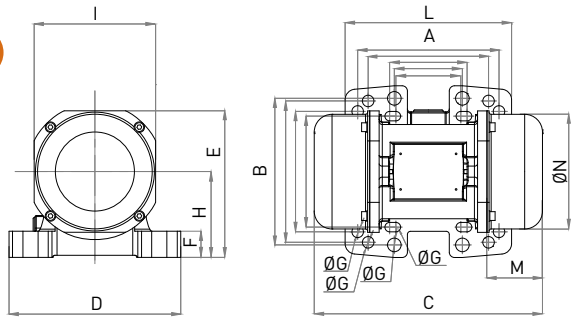

H

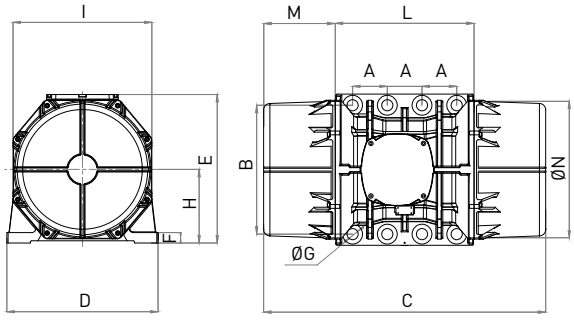

WHEN YOU NEED IT, WHERE YOU NEED IT.

THE WORLDWIDE LEADER IN VIBRATION TECHNOLOGY

WWW.OLIVIBRA.COM

OLI®

OLI Headquarters

Via Canalazzo, 35
41036 Medolla (MO) - Italy

+39 0535 41 06 11

info@olivibra.com

OLI worldwide

OLI Australia
OLI Benelux
OLI Brazil
OLI China
OLI France
OLI Germany
OLI India
OLI Italy
OLI Malta
OLI Middle East
OLI Nordic
OLI Russia
OLI South Africa
OLI Spain
OLI Thailand
OLI Turkey
OLI UK
OLI USA

CIVEN 03/19 REV 16